MECcheck™ Prescriptive Packages User's Guide

1992, 1993, and 1995 Model Energy Code
Version 3.0
April 2000

MEC*check*™ was developed by the Building Energy Standards Program at Pacific Northwest National Laboratory for use by the U.S. Department of Housing and Urban Development (HUD) and the Rural Economic and Community Development (RECD) under contract with the U.S. Department of Energy's Office of Codes and Standards. Pacific Northwest National Laboratory is operated by Battelle Memorial Institute for the U.S. Department of Energy under Contract DE-AC06-76RLO 1830.

We encourage any questions, comments, or suggestions you may have regarding the MEC*check* materials.
Contact information:

DOE's Building Standards and Guidelines Program
Energy Codes Hotline: 1-800-270-CODE (2633)
Internet Address: www.energycodes.org
Technical Support: TechSupport@bsgp.pnl.gov

MEC*check*™
Prescriptive Packages User's Guide

1992, 1993, and 1995 Model Energy Code
Version 3.0
April 2000

Contents:

Introduction to MEC*check*
Basic Requirements Guide
Prescriptive Packages User's Guide
Appendix A: Additions
Appendix B: Default U-Factors
Appendix C: Building Envelope
Appendix D: Forms
Appendix E: Climate Zones by States and Counties
Definitions

Introduction to MEC*check*

What are the MEC and IECC?

The Model Energy Code (MEC) contains energy-related building requirements applying to many new U.S. residences. The MEC was previously maintained by the Council of American Building Officials (CABO), which was comprised of the three U.S. model code groups: the Building Officials and Code Administrators, International (BOCA); the International Conference of Building Officials (ICBO); and the Southern Building Code Congress International (SBCCI). These groups subsequently combined into an "umbrella" organization called the International Code Council (ICC). The ICC issued the 1998 MEC under a new name, the 1998 International Energy Conservation Code (IECC).

Both the MEC and the IECC codes contain energy-related requirements applying to many new U.S. residences. The U.S. Department of Housing and Urban Development (HUD) loan guarantee program requires compliance with the MEC. The Rural Economic and Community Development (RECD, fomerly the Farmer's Home Administration) loan guarantee program requires that single-family buildings comply with the MEC. Several states have also adopted the MEC or IECC as their residential energy code.

The MEC and IECC codes specify thermal envelope requirements for one- and two-family residential buildings and multifamily residential buildings three stories or less in height. A major focus of the code provisions is on the building envelope insulation and window requirements, which are more stringent in colder climates. Maximum U-factor requirements are specified for walls, ceilings, floors, crawl space walls, and basement walls and minimum R-value requirements are specified for slab floors. To comply with the code, a building must be constructed with components meeting or exceeding these requirements. However, the U-factor of a given assembly may be increased or the R-value of a given assembly may be decreased, provided the total heat gain or loss for the entire building does not exceed the total resulting from conformance with the requirements. Other requirements focus on the heating and cooling system (including ducts), water-heating systems, and air leakage.

What Buildings Must Comply?

The code applies to new residential buildings, three stories or less in height, and additions to such buildings. Residential buildings are defined as detached one- and two-family buildings (referred to as single-family buildings or type A1 in the code) and multifamily buildings (such as apartments, condominiums, townhouses, dormitories, and rowhouses). Multifamily buildings have three or more attached dwelling units and are referred to as

type A2 in the code. Throughout these materials, generic references to “building(s)” signify residential buildings three stories or less in height.

When over 10% of the area of any floor of a residential building is used for commercial purposes, the portion of the building used for commercial purposes must meet the requirements of the commercial energy code. In such cases, the code will only apply to those portions of the building that are used for residential purposes. Multifamily buildings four or more stories above grade are considered commercial buildings.

Exemptions

The following building categories are exempted from the provisions of the code:

- existing buildings
- very low-energy buildings (<3.4 Btu/h· ft2 or 1 W/ft2 of floor area)
- buildings (or portions of buildings) that are neither heated nor cooled
- buildings designated as historical.

About the MEC*check* Materials

The MEC*check* materials are applicable to the 1992, 1993, and 1995 MEC and the 1998 and 2000 IECC, and refer to these codes collectively as the code. The MEC*check* software has a *Code* menu which allows you to select the code for which compliance is to be determined. Two sets of printed MEC*check* materials are available; one set for the three MEC code editions and a second set for the two IECC code editions. Although these codes are quite similar, there are some differences in the code requirements that occasionally must be reflected in the text of the materials. When a block of text or a table only applies to a certain edition of the code, the applicable year is printed in the margin to the left of the text or table.

The MEC*check* materials provide guidance on how to meet the code requirements. Making the MEC and IECC simple and understandable was the major motivation for developing them. The desire for simplicity and clarity led to changes in format, deletion of redundant text, and deletion of text that had no impact. If you are familiar with the MEC and/or IECC, you will note that the MEC*check* materials differ significantly in format from these codes.

The MEC*check* materials were created for HUD and RECD. Check with your building department or other state or local building code enforcement authority to verify that the MEC*check* materials are accepted in your jurisdiction, because some of the requirements may be superseded by state laws or local ordinances.

It is not necessary to have a copy of the code to use any MEC*check* materials. Although the *Basic Requirements Guide* lists code section numbers for cross reference, it is not necessary to refer to the referenced sections. All references to figures and tables in a specific guide refer to figures and tables located in that guide unless specifically stated otherwise.

What's in the MEC*check* Guides?

The *Basic Requirements Guide* applies to all residential buildings and should be read by all users of MEC*check* materials. Home builders and designers can then use one of the three MEC*check* approaches to show compliance with the insulation and window requirements. The prescriptive package approach is described in the *Prescriptive*

Package User's Guide. The software approach is described in the *Software User's Guide*. The trade-off approach is described in *the Trade-Off Worksheet User's Guide*. The MEC*check Workbook* is a collection of guides which includes the *Basic Requirements Guide*, the *Prescriptive Package User's Guide*, the *Trade-Off Worksheet User's Guide*, and the *Software User's Guide*, with the software diskette attached to the last page.

The *Basic Requirements Guide* discusses all of the basic requirements except for the insulation and window requirements (which are covered in other sections). The basic requirements represent minimum criteria that must be met regardless of which insulation compliance approach you choose. These criteria include provisions that limit air leakage through the building envelope and regulate heating and cooling systems and duct insulation levels.

The *Prescriptive Package User's Guide* describes the simplest of the three compliance approaches. With this approach, you select a package of insulation and window requirements from a list of packages developed for a specific climate zone. Each package specifies insulation levels, glazing areas, glazing U-factors, and sometimes heating and cooling equipment efficiency. Once selected, simply meet or exceed all requirements listed in the package to achieve compliance. Few calculations are required.

The *Trade-Off Worksheet User's Guide* briefly describes a "pencil-and-paper" compliance approach. The trade-off approach enables you to trade off insulation and window efficiency levels in different parts of the building. You can trade off ceiling, wall, floor, basement wall, slab-edge, and crawl space wall insulation; glazing and door areas; and glazing and door U-factors. The trade-off approach calculates whether your home as a whole meets the overall code insulation and window requirements.

The *Software User's Guide* explains how to use the MEC*check* software approach. The software approach is the most flexible of the three compliance approaches. The software allows trade-offs between all building envelope components and heating and cooling equipment efficiencies. With minimal input, you can quickly compare different insulation levels to select a package that works best for your proposed building. Unlike the prescriptive package and trade-off approaches, the software approach enables you to trade off basement wall, slab-edge, and crawl space wall insulation depth as well as insulation R-value. The software automatically generates a report that can be submitted for plan review to document compliance.

Several forms, worksheets, and lists are included with the MEC*check* materials to help determine and document compliance. You may make multiple copies of the forms and distribute them freely. Alternative forms that provide the same information may also be used if they are approved by your jurisdiction.

Who Should Use the MEC*check* Materials?

The MEC*check* materials were designed to guide builders and designers, plan check personnel, and field inspectors through the code compliance process. All necessary compliance forms, reference materials, and explanations are included.

Builders and Designers can follow each step of the compliance process presented in the MEC*check* guides. The *Basic Requirements Guide* describes code requirements that must be satisfied by all residences. The *Prescriptive Package User's Guide*, the *Software User's Guide*, and the *Trade-Off Worksheet User's Guide* offer a choice of approaches, any of which can be used to show compliance with the insulation and window requirements of the code.

Plan Check Personnel can use the *Plan Check and Field Inspection Guide* as a guide to ensure that building plans and specifications comply with the code. If questions arise, the

plan reviewer can trace the compliance steps used by the applicant and reference the steps in the other guides.

Field Inspectors and Site Superintendents can use *the Plan Check and Field Inspection Guide* to ensure that all of the applicable code requirements have been installed in a building. The features that meet these requirements must be included on the building plans or specifications and on compliance forms. The *Basic Requirements Guide* will also be of interest to field inspectors and site superintendents. It describes the features that must be installed in the building regardless of the compliance approach chosen.

MEC*check* Compliance Process?

Figure 1 illustrates the steps you should follow to determine compliance with the code.

Step 1: Determine If Your Building Must Comply with the Code. (See What Buildings Must Comply? in this introduction.)

Step 2: Meet the Basic Requirements. The basic requirements discussed in the *Basic Requirements Guide* must be incorporated into the design.

Step 3: Use One of Three Compliance Approaches for Insulation and Windows. Select one of the three compliance approaches described in the *Prescriptive Package User's Guide*, *the Software User's Guide*, and the *Trade-Off Worksheet User's Guide*. Examining the prescriptive packages for the building location will give you an idea of the insulation requirements. Use the selected approach to determine the insulation and window requirements. Document compliance on the form(s) provided for the selected approach.

Step 4: Submit Building Plans and Compliance Forms for Plan Review. Submit MEC*check* forms or their equivalent, building plans, and specifications for plan review. The compliance forms must match the building plans and specifications.

Step 5: Construct the Building According to Approved Plans. In most jurisdictions, construction may begin after a building permit is issued. It is required to have the approved set of plans and specifications at the job site for use by the field inspector. MEC*check* forms or their equivalent must be re-submitted if changes from the approved plans or specifications are made that increase the glazing area, decrease insulation R-values, or decrease equipment efficiencies of the building.

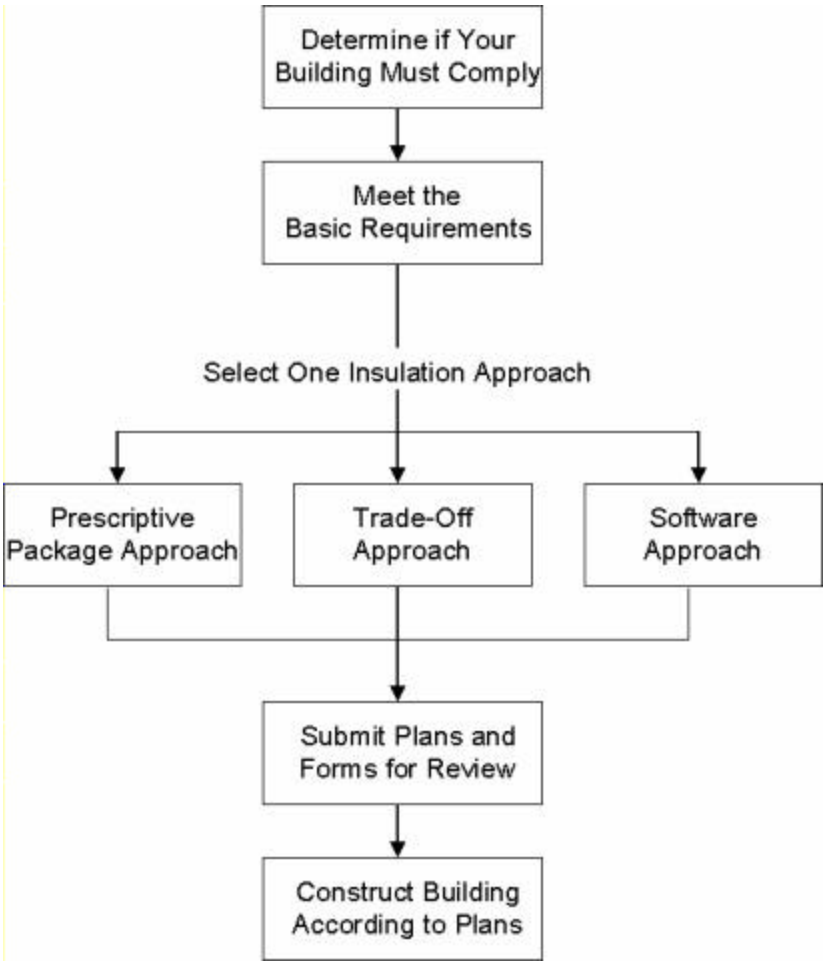

Figure 1. MECcheck Compliance Path

Basic Requirements Guide

1992 MEC, 1993 MEC, and 1995 MEC

Inside This Guide

Air Leakage
Vapor Retarders
Materials and Equipment Information
Heating and Cooling
Service (Potable) Water Heating
Electrical

Basic Requirements

The code specifies basic requirements that are mandatory for all buildings. Some of these requirements apply to the heating and cooling system (including ducts), hot water system, and electrical system. Other requirements apply to material and equipment identification and to sealing the building envelope. This guide discusses the code basic requirements, except for the insulation and window requirements (which are covered in other guides). Each requirement in this guide lists the corresponding code section number as a reference.

Figure 1 graphically illustrates several basic requirements. Refer to the *Summary of Basic Requirements* provided with this guide for a one-page listing of the requirements discussed below.

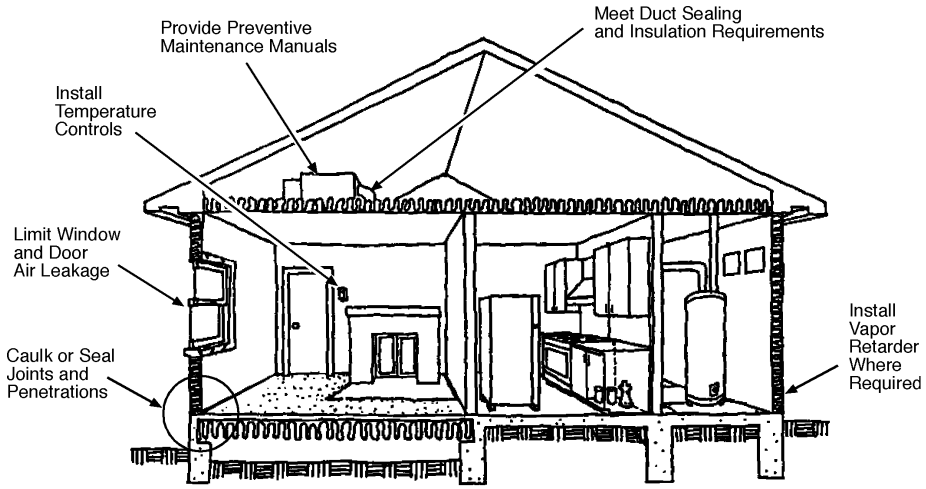

Figure 1. Some of the Basic Requirements

Air Leakage

(1992: Section 502.4.3; 1993: Section 502.3.3; 1995: Sections 502.3.3 and 502.3.4) All joints and penetrations in the building envelope that are sources of air leakage must be caulked, gasketed, weatherstripped, or otherwise sealed in an approved manner. The following areas should be sealed using appropriate materials :

- exterior joints around window and door frames

- between wall sole plates, floors, and exterior wall panels

- openings for plumbing, electricity, refrigerant, and gas lines in exterior walls, floors, and roofs

- openings in the attic floor (such as where ceiling panels meet interior and exterior walls and masonry fireplaces)
- service and access doors or hatches
- openings for plumbing and gas lines in the subfloor and interior plates of kitchens and bathrooms
- all other similar openings in the building envelope

1995

- recessed lighting fixtures.

Sealants used between dissimilar materials (such as between the sole plate and a slab floor) must allow for the expansion and contraction of the materials.

1995 Recessed lighting fixtures must be 1) IC rated with no penetrations, or 2) IC rated in accordance with ASTM 283, or 3) installed inside an air-tight assembly with a 0.5 inch (12.76 mm) clearance from any combustible material and a 3 inch (76 mm) clearance from insulation material.

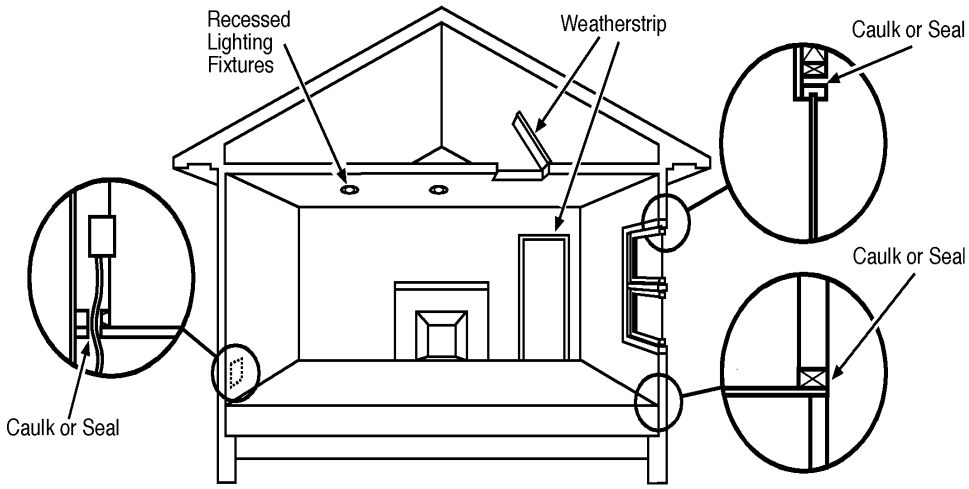

Figure 2. Typical Openings that Should be Sealed

Vapor Retarders

(Section 501.1.4) Vapor retarders must be installed in all non-vented framed ceilings, walls, and floors. Non-vented areas are framed cavities without vents or other openings allowing the free movement of air. The vapor retarder must have a perm rating of 1.0 or less and must be installed on the "warm-in-winter side" of the insulation (between the insulation and the conditioned space).

Exemptions: Vapor retarders are not required:

- In the climate zones identified in Table 1. Exempted climate zones are also identified with an "(H)" in the state county listing in Appendix E and on the state maps included with the prescriptive packages. If you are using the MEC*check* software, the vapor retarder requirement is printed in the *Inspection Checklist*. If the requirement is not printed in the checklist, the building's location is exempt.
- Where moisture or its freezing will not damage the materials.

Table 1. Vapor Retarder Requirement Exemptions

State(s)	Zones
Texas	2-5
Alabama, Georgia, N. Carolina, Oklahoma, S. Carolina	4-6
Arkansas, Tennessee	6-7
Florida, Hawaii, Louisiana, Mississippi	All

Materials and Equipment Information

(Section 104.2) Insulation R-values and glazing and door U-factors must be clearly marked on the building plans or specifications. If two or more different insulation levels exist for the same component, record each level separately on the plans or specifications. For example, if the walls adjacent to the garage have less insulation than the other walls, both insulation levels must be noted. If credit is taken for high-efficiency heating or

cooling equipment, the equipment efficiency, make and model number must also be marked on the plans or specifications.

(Section 102.1) Materials and equipment must be identified in a manner that will allow compliance with the code to be determined. There are several ways to label materials and equipment to satisfy this requirement.

- Provide labels on all pertinent materials and equipment. For example, the R-value of the insulation is often pre-printed directly on the insulation or can be determined from a striping code. Window U-factors are often included on the manufacturer label posted directly on the window.
- Provide contractor statements certifying the products they have installed. For example, the insulation contractor should certify the R-value of the installed insulation.
- An optional *Energy Label* is included in Appendix D. Materials and equipment can be identified on this label which should then be posted in the residence (e.g., on the main fuse box, on a garage wall, in the utility room) to document the energy efficiency features of the building.

1995 *(1995: Section 102.1.3)* For blown or sprayed insulation, the initial installed thickness, the settled thickness, the coverage area, and the number of bags must be clearly posted at the job site. In attics, thickness markers must be placed at least once every 300 square feet.

(Section 102.2) Manufacturer manuals for all installed heating and cooling equipment and service water heating equipment must be provided to the homeowner.

Heating and Cooling

Heating and Cooling Equipment Efficiencies

The code defines heating and cooling equipment efficiency requirements. However, federal regulations have restricted manufactured equipment efficiency minimums to levels at or above these code requirements. Because new equipment efficiencies below the code requirements can no longer be manufactured, these requirements have been omitted from the MEC*check* materials.

Duct Insulation

(1992 and 1993: Section 503.9.1; 1995: Section 503.7.1) Supply- and return-air ducts and plenums for heating and cooling systems located in unconditioned spaces (spaces neither heated nor cooled) must be insulated to the minimum R-value specified in Table 2. Unconditioned spaces include ventilated crawl spaces, ventilated attics, and framed cavities in those floor, wall, and ceiling assemblies which a) separate conditioned space from unconditioned space or outside air and b) are uninsulated on the side facing away from conditioned space.

Exceptions: Duct insulation is not required in the following cases:

- within heating, ventilating, and air conditioning (HVAC) equipment
- for exhaust air ducts
- when the design temperature difference between the air in the duct and the surrounding air is 15°F or less.

Additional insulation with vapor barrier must be provided if condensation will create a problem.

Select the zone number for your building location and find the R-value requirement from Table 2 based on where the ducts are located. For the prescriptive package and trade-off worksheet approaches, your zone number can be found in Appendix E or on the state map included with the prescriptive packages. If you are using the MEC*check* software, the duct insulation requirement is printed in the *Inspection Checklist*.

When ducts are located in exterior building cavities, either

- The full insulation R-value requirement for that building component must be installed between the duct and the building exterior, in which case the ducts do not require insulation, or
- The ducts must be insulated to the duct R-value requirement given in Table 2 and the duct area must be treated as a separate component. For example, if ducts insulated to R-6 are located in an exterior wall insulated to R-19, the area of the wall minus the duct area is a wall component with R-19 insulation, and the area of the ducts is a wall component with R-6 insulation.

1992

Table 2. Duct Insulation R-Value Requirement for 1992 MEC

Zone Number	Ducts Located in Attics, Crawl Spaces, Exterior Cavities, Outside	Ducts Located in Unheated Basements
Zones 1-8	R-6	R-6
Zones 9-16	R-8	R-6
Zone 17	R-9	R-6
Zone 18	R-9	R-8
Zone 19	R-11	R-8

1993 1995

Table 2. Duct Insulation R-Value Requirements for 1993 and 1995 MEC

Zone Number	Ducts in Unconditioned Spaces (i.e. Attics, Crawl Spaces, Unheated Basements and Garages, and Exterior Cavities)	Ducts Outside the Building
Zones 1-4	R-5	R-8
Zones 5-14	R-5	R-6.5
Zones 15-19	R-5	R-8

Duct Construction

1992 1993

(Section 503.10.2) All transverse joints in ductwork located in unconditioned spaces must be sealed with mastic, tape, or mastic plus tape. Pressure-sensitive tape may be used for fiberglass ductwork.

1995

(Section 503.8.2) Ducts must be sealed using mastic with fibrous backing tape. For fibrous ducts, pressure-sensitive may be used. Other sealants may be approved by the building official. Duct tape is not permitted.

Duct with mastic

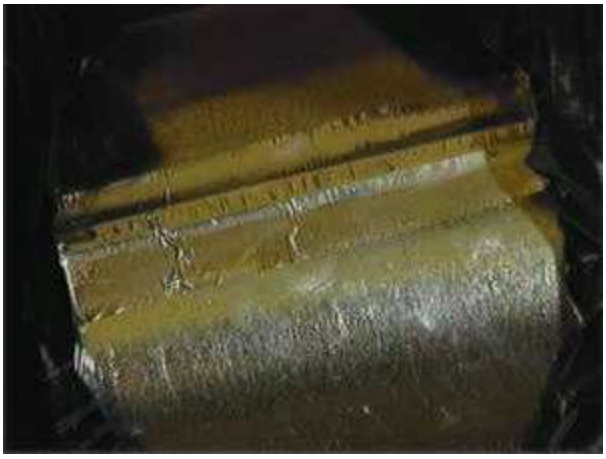

(1992 and 1993: Section 503.6; 1995: Section 503.5) The HVAC system must provide a means for balancing air and water systems. For air systems, this requirement can be met by installing manual dampers at each branch of the ductwork or by installing adjustable

registers that can constrict the airflow into a room. For water systems, balancing valves can be installed to control the water flow to rooms or zones.

Temperature Controls

(1992 and 1993: Section 503.8.3.1; 1995: Section 503.6.3.1) For one- and two-family buildings, at least one thermostat must be provided for each separate system (heating, cooling, or combination of heating and cooling). Electric baseboard heaters can be individually controlled by separate thermostats or several baseboard heaters can be controlled by a single thermostat.

(1992 and 1993: Section 503.8.3.2; 1995: Section 503.6.3.2) For multifamily buildings, each dwelling unit must have a separate thermostat and a readily accessible, manual or automatic means to restrict or shut off the heating and/or cooling input to each room must be provided. Operable diffusers or registers that can restrict or shut off the airflow into a room meet this requirement.

(1992 and 1993: Section 503.8.3.3; 1995: Section 503.6.3.2) At least one thermostat must be provided for each system or each zone in the non-dwelling portions of multifamily buildings. For example, separate systems serving interior corridors or attached laundry rooms must have their own thermostat.

(1992 and 1993: Section 503.8; 1995: Section 503.6.1) Each heating and cooling system must have a thermostat with at least the following range:

- Heating only (55°F to 75°F)
- Cooling only (70°F to 85°F)
- Heating and cooling (55°F to 85°F) – the thermostat must be capable of operating the system heating and cooling in sequence (i.e., simultaneous operation is not permitted).

Thermostat

Heat Pump Thermostats

(1992 and 1993: Section 503.4.2.3; 1995: Section 503.3.2.23) Heat pump installations must include a thermostat that can prevent the back-up heat from turning on when the

heating requirements can be met by the heat pump alone. A two-stage thermostat that controls the back-up heat on its second stage meets this requirement.

HVAC Piping Insulation

(1992 and 1993: Section 503.11; 1995: Section 503.9) All HVAC piping (such as in hydronic heating systems) installed in unconditioned spaces and conveying fluids at temperatures greater than 120°F or chilled fluids at less than 55°F must be insulated to the thicknesses specified in Table 3. Pipe insulation is not required for piping installed within HVAC equipment.

Table 3. Minimum HVAC Piping Insulation Thickness [(a)]

Piping System Types	Fluid Temp Range (°F)	Insulation Thickness in Inches by Pipe Sizes [(b)]			
		Runouts 2in. [(c)]	1 in. and less	1.25 in. to 2 in.	2.5 in. to 4 in.
Heating Systems					
Low Pressure/Temperature	201-250	1.0	1.5	1.5	2.0
Low Temperature	120-200	0.5	1.0	1.0	1.5
Steam Condensate (for feed water)	Any	1.0	1.0	1.5	2.0
Cooling Systems					
Chilled Water, Refrigerant, and Brine	40-55 Below 40	0.5 1.0	0.5 1.0	0.75 1.5	1.0 1.5

(a) The pipe insulation thicknesses specified in this table are based on insulation R-values ranging from R-4 to R-4.6 per inch of thickness. For materials with an R-value greater than R-4.6, the insulation thickness specified in this table may be reduced as follows:

New Minimum Thickness = 4.6 x Table 2-3 Thickness/Actual R-Value

For materials with an R-value less than R-4, the minimum insulation thickness must be increased as follows:

New Minimum Thickness = 4.0 x Table 2-3 Thickness/Actual R-Value

(b) For piping exposed to outdoor air, increase thickness by 0.5 in.

(c) Applies to runouts not exceeding 12 ft in length to individual terminal units.

Service (Potable) Water Heating

Swimming Pools

(Section 504.5) All heated swimming pools must be equipped with an on/off pool heater switch mounted for easy access. Heated pools require a pool cover unless over 20% of the heating energy is from non-depletable sources (such as solar heat).

(Section 504.5.3) All swimming pool pumps must be equipped with a time clock.

Circulating Service Hot Water Systems

(Section 504.6) Circulating hot water systems must have automatic or manual controls that allow the pumps to be conveniently turned off when the hot water system is not in operation.

(Section 504.7) Piping in circulating hot water systems must be insulated to the levels specified in Table 4 unless an engineering calculation is provided that demonstrates that insulation will not reduce the annual energy requirements of the building.

Table 4. Minimum Insulation Thickness for Recirculation Piping

Heated Water Temperature (°F)	Insulation Thickness in Inches by Pipe Sizes (a)			
	Non-Circulating Runouts	Circulating Mains and Runouts		
	Up to 1 in.	Up to 1.25 in.	1.5-2.0 in.	Over 2 in.
170-180	0.5	1.0	1.5	2.0
140-160	0.5	0.5	1.0	1.5
100-130	0.5	0.5	0.5	1.0
(a) Nominal pipe size and insulation thickness.				

Electrical

(1992 and 1993: Section 505.2; 1995: Section 505.1) All dwelling units in multifamily buildings must be equipped with separate electric meters.

1992 Model Energy Code
Summary of Basic Requirements

Air Leakage	• Joints, penetrations, and all other such openings in the building envelope that are sources of air leakage must be caulked, gasketed, weatherstripped, or otherwise sealed.
Vapor Retarder	Vapor retarders must be installed on the warm-in-winter side of all non-vented framed ceilings, walls, and floors. This requirement does not apply to the following climate zones nor where moisture or its freezing will not damage the materials. • Texas — Zones 2-5 • Alabama, Georgia, N. Carolina, Oklahoma, S. Carolina — Zones 4-6 • Arkansas, Tennessee — Zones 6-7 • Florida, Hawaii, Louisiana, Mississippi — All Zones
Materials and Insulation Information	• Materials and equipment must be identified so that compliance can be determined. • Manufacturer manuals for all installed heating and cooling equipment and service water heating equipment must be provided. • Insulation R-values, glazing and door U-values, and heating and cooling equipment efficiency (if high-efficiency credit is taken) must be clearly marked on the building plans or specifications.
Duct Insulation	Supply and return-air ducts and plenums for heating and cooling systems located in unconditioned spaces must be insulated to the levels shown on the reverse side of this sheet. *Exceptions:* Insulation is not required for exhaust air ducts, ducts within HVAC equipment, and when the design temperature difference between the air in the duct and the surrounding air is 15EF or less.
Duct Construction	• All transverse joints must be sealed with mastic, tape, or mastic plus tape. • The HVAC system must provide a means for balancing air and water systems.
Temperature Controls	• Thermostats are required for each separate HVAC system in single-family buildings and each dwelling unit in multifamily buildings (non-dwelling portions require one thermostat for each system or zone). Thermostats must have the following ranges: Heating Only — 55EF - 75EF Cooling Only — 70EF - 85EF Heating and Cooling — 55EF - 85EF • A manual or automatic means to partially restrict or shut off the heating and/or cooling input to each zone or floor shall be provided for single-family homes and to each room for multifamily buildings. • Heat pumps require a thermostat that can prevent the back-up heat from turning on when the heating requirements can be met by the heat pump alone.
HVAC Piping Insulation	HVAC piping in unconditioned spaces conveying fluids at temperatures above 120EF or chilled fluids at less than 55EF must be insulated to the levels shown on the reverse side of this sheet.
Swimming Pools	• All heated swimming pools must have an on/off pool heater switch. • Heated pools require a pool cover unless over 20% of the heating energy is from non-depletable sources. • All swimming pool pumps must be equipped with a time clock.
Circulating Hot Water	• Circulating hot water systems must have automatic or manual controls. • Pipes must be insulated to the levels shown on the reverse side of this sheet.
Electric Systems	Each multifamily dwelling unit must be equipped with separate electric meters.

Version 3.0/April 2000/U.S. Department of Housing and Urban Development / Rural Economic and Community Development/U.S. Dept. of Energy/Pacific Northwest National Laboratory

1992 Model Energy Code

Duct Insulation R-Value Requirements

Zone Number	Duct Insulation R-Value Requirements	
	Ducts Located In: Attics, Crawl Spaces, Exterior Cavities, Outside	Ducts Located In: Unheated Basements
Zones 1-8	R-6	R-6
Zones 9-16	R-8	R-6
Zone 17	R-9	R-6
Zone 18	R-9	R-8
Zone 19	R-11	R-8

Minimum HVAC Piping Insulation Thickness[a]

Piping System Types	Fluid Temp Range (EF)	Insulation Thickness in Inches by Pipe Sizes[b]			
		Runouts 2 in.[c]	1 in. and Less	1.25 in. to 2 in.	2.5 in. to 4 in.
Heating Systems					
Low Pressure/Temperature	201-250	1.0	1.5	1.5	2.0
Low Temperature	120-200	0.5	1.0	1.0	1.5
Steam Condensate (for feed water)	Any	1.0	1.0	1.5	2.0
Cooling Systems					
Chilled Water, Refrigerant, and Brine	40-55	0.5	0.5	0.75	1.0
	Below 40	1.0	1.0	1.5	1.5

(a) The pipe insulation thicknesses specified in this table are based on insulation R-values ranging from R-4 to R-4.6 per inch of thickness. For materials with an R-value greater than R-4.6, the insulation thickness specified in this table may be reduced as follows:

$$New\ Minimum\ Thickness\ '\ \frac{4.6\ x\ Table\ 2\&2\ Thickness}{Actual\ R\&Value}$$

For materials with an R-value less than R-4, the minimum insulation thickness must be increased as follows:

$$New\ Minimum\ Thickness\ '\ \frac{4.0\ x\ Table\ 2\&2\ Thickness}{Actual\ R\&Value}$$

(b) For piping exposed to outdoor air, increase thickness by 0.5 in.
(c) Applies to runouts not exceeding 12 ft in length to individual terminal units.

Minimum Insulation Thickness for Recirculation Piping

Heated Water Temperature (EF)	Insulation Thickness in Inches by Pipe Sizes[a]			
	Non-Circulating Runouts	Circulating Mains and Runouts		
	Up to 1 in.	Up to 1.25 in.	1.5 - 2.0 in.	Over 2 in.
170-180	0.5	1.0	1.5	2.0
140-160	0.5	0.5	1.0	1.5
100-130	0.5	0.5	0.5	1.0

(a) Nominal pipe size and insulation thickness.

1993 Model Energy Code
Summary of Basic Requirements

Air Leakage	• Joints, penetrations, and all other such openings in the building envelope that are sources of air leakage must be caulked, gasketed, weatherstripped, or otherwise sealed.
Vapor Retarder	Vapor retarders must be installed on the warm-in-winter side of all non-vented framed ceilings, walls, and floors. This requirement does not apply to the following climate zones nor where moisture or its freezing will not damage the materials. • Texas — Zones 2-5 • Alabama, Georgia, N. Carolina, Oklahoma, S. Carolina — Zones 4-6 • Arkansas, Tennessee — Zones 6-7 • Florida, Hawaii, Louisiana, Mississippi — All Zones
Materials and Insulation Information	• Materials and equipment must be identified so that compliance can be determined. • Manufacturer manuals for all installed heating and cooling equipment and service water heating equipment must be provided. • Insulation R-values, glazing and door U-values, and heating and cooling equipment efficiency (if high-efficiency credit is taken) must be clearly marked on the building plans or specifications.
Duct Insulation	Supply and return-air ducts and plenums for heating and cooling systems located in unconditioned spaces must be insulated to the levels shown on the reverse side of this sheet. *Exceptions:* Insulation is not required for exhaust air ducts, ducts within HVAC equipment, and when the design temperature difference between the air in the duct and the surrounding air is 15EF or less.
Duct Construction	• All transverse joints must be sealed with mastic, tape, or mastic plus tape. • The HVAC system must provide a means for balancing air and water systems.
Temperature Controls	• Thermostats are required for each separate HVAC system in single-family buildings and each dwelling unit in multifamily buildings (non-dwelling portions require one thermostat for each system or zone). Thermostats must have the following ranges: Heating Only — 55EF - 75EF Cooling Only — 70EF - 85EF Heating and Cooling — 55EF - 85EF • A manual or automatic means to partially restrict or shut off the heating and/or cooling input to each zone or floor shall be provided for single-family homes and to each room for multifamily buildings. • Heat pumps require a thermostat that can prevent the back-up heat from turning on when the heating requirements can be met by the heat pump alone.
HVAC Piping Insulation	HVAC piping in unconditioned spaces conveying fluids at temperatures above 120EF or chilled fluids at less than 55EF must be insulated to the levels shown on the reverse side of this sheet.
Swimming Pools	• All heated swimming pools must have an on/off pool heater switch. • Heated pools require a pool cover unless over 20% of the heating energy is from non-depletable sources. • All swimming pool pumps must be equipped with a time clock.
Circulating Hot Water	• Circulating hot water systems must have automatic or manual controls. • Pipes must be insulated to the levels shown on the reverse side of this sheet.
Electric Systems	Each multifamily dwelling unit must be equipped with separate electric meters.

Version 3.0/April 2000/U.S. Dept. of Housing and Urban Development / Rural Economic and Community Development/U.S. Dept. of Energy/Pacific Northwest National Laboratory

1993 Model Energy Code

Duct Insulation R-Value Requirements

Zone Number	Ducts in Unconditioned Spaces (i.e. Attics, Crawl Spaces, Unheated Basements and Garages, and Exterior Cavities)	Ducts Outside the Building
Zones 1-4	R-5	R-8
Zones 5-14	R-5	R-6.5
Zone 15-19	R-5	R-8

Minimum HVAC Piping Insulation Thickness[a]

Piping System Types	Fluid Temp Range (EF)	Insulation Thickness in Inches by Pipe Sizes[b]			
		Runouts 2 in.[c]	1 in. and Less	1.25 in. to 2 in.	2.5 in. to 4 in.
Heating Systems					
Low Pressure/Temperature	201-250	1.0	1.5	1.5	2.0
Low Temperature	120-200	0.5	1.0	1.0	1.5
Steam Condensate (for feed water)	Any	1.0	1.0	1.5	2.0
Cooling Systems					
Chilled Water, Refrigerant, and Brine	40-55	0.5	0.5	0.75	1.0
	Below 40	1.0	1.0	1.5	1.5

(a) The pipe insulation thicknesses specified in this table are based on insulation R-values ranging from R-4 to R-4.6 per inch of thickness. For materials with an R-value greater than R-4.6, the insulation thickness specified in this table may be reduced as follows:

$$\textit{New Minimum Thickness} = \frac{4.6 \times \textit{Table 2\&2 Thickness}}{\textit{Actual R\&Value}}$$

For materials with an R-value less than R-4, the minimum insulation thickness must be increased as follows:

$$\textit{New Minimum Thickness} = \frac{4.0 \times \textit{Table 2\&2 Thickness}}{\textit{Actual R\&Value}}$$

(b) For piping exposed to outdoor air, increase thickness by 0.5 in.
(c) Applies to runouts not exceeding 12 ft in length to individual terminal units.

Minimum Insulation Thickness for Recirculation Piping

Heated Water Temperature (EF)	Insulation Thickness in Inches by Pipe Sizes[a]			
	Non-Circulating Runouts	Circulating Mains and Runouts		
	Up to 1 in.	Up to 1.25 in.	1.5 - 2.0 in.	Over 2 in.
170-180	0.5	1.0	1.5	2.0
140-160	0.5	0.5	1.0	1.5
100-130	0.5	0.5	0.5	1.0

(a) Nominal pipe size and insulation thickness.

1995 Model Energy Code
Summary of Basic Requirements

Air Leakage	• Joints, penetrations, and all other such openings in the building envelope that are sources of air leakage must be caulked, gasketed, weatherstripped, or otherwise sealed. • Recessed lights must be type IC rated and installed with no penetrations or installed inside an appropriate air-tight assembly with a 0.5-in. clearance from combustible materials and 3-in. clearance from insulation.
Vapor Retarder	Vapor retarders must be installed on the warm-in-winter side of all non-vented framed ceilings, walls, and floors. This requirement does not apply to the following climate zones nor where moisture or its freezing will not damage the materials. • Texas — Zones 2-5 • Alabama, Georgia, N. Carolina, Oklahoma, S. Carolina — Zones 4-6 • Arkansas, Tennessee — Zones 6-7 • Florida, Hawaii, Louisiana, Mississippi — All Zones
Materials and Insulation Information	• Materials and equipment must be identified so that compliance can be determined. • Manufacturer manuals for all installed heating and cooling equipment and service water heating equipment must be provided. • Insulation R-values, glazing and door U-values, and heating and cooling equipment efficiency (if high-efficiency credit is taken) must be clearly marked on the building plans or specifications.
Duct Insulation	Supply and return-air ducts and plenums for heating and cooling systems located in unconditioned spaces must be insulated to the levels shown on the reverse side of this sheet. *Exceptions:* Insulation is not required for exhaust air ducts, ducts within HVAC equipment, and when the design temperature difference between the air in the duct and the surrounding air is 15EF or less.
Duct Construction	• All transverse joints must be sealed with mastic, tape, or mastic plus tape. • The HVAC system must provide a means for balancing air and water systems.
Temperature Controls	• Thermostats are required for each separate HVAC system in single-family buildings and each dwelling unit in multifamily buildings (non-dwelling portions require one thermostat for each system or zone). Thermostats must have the following ranges: Heating Only — 55EF - 75EF Cooling Only — 70EF - 85EF Heating and Cooling — 55EF - 85EF • A manual or automatic means to partially restrict or shut off the heating and/or cooling input to each zone or floor shall be provided for single-family homes and to each room for multifamily buildings. • Heat pumps require a thermostat that can prevent the back-up heat from turning on when the heating requirements can be met by the heat pump alone.
HVAC Piping Insulation	HVAC piping in unconditioned spaces conveying fluids at temperatures above 120EF or chilled fluids at less than 55EF must be insulated to the levels shown on the reverse side of this sheet.
Swimming Pools	• All heated swimming pools must have an on/off pool heater switch. • Heated pools require a pool cover unless over 20% of the heating energy is from non-depletable sources. • All swimming pool pumps must be equipped with a time clock.
Circulating Hot Water	• Circulating hot water systems must have automatic or manual controls. • Pipes must be insulated to the levels shown on the reverse side of this sheet.
Electric Systems	Each multifamily dwelling unit must be equipped with separate electric meters.

Version 3.0/April 2000/U.S. Dept. of Housing and Urban Development / Rural Economic and Community Development/U.S. Dept. of Energy/Pacific Northwest National Laboratory

1995 Model Energy Code

Duct Insulation R-Value Requirements

Zone Number	Ducts in Unconditioned Spaces (i.e. Attics, Crawl Spaces, Unheated Basements and Garages, and Exterior Cavities)	Ducts Outside the Building
Zones 1-4	R-5	R-8
Zones 5-14	R-5	R-6.5
Zone 15-19	R-5	R-8

Minimum HVAC Piping Insulation Thickness[a]

Piping System Types	Fluid Temp Range (EF)	Insulation Thickness in Inches by Pipe Sizes[b]			
		Runouts 2 in.[c]	1 in. and Less	1.25 in. to 2 in.	2.5 in. to 4 in.
Heating Systems					
Low Pressure/Temperature	201-250	1.0	1.5	1.5	2.0
Low Temperature	120-200	0.5	1.0	1.0	1.5
Steam Condensate (for feed water)	Any	1.0	1.0	1.5	2.0
Cooling Systems					
Chilled Water, Refrigerant, and Brine	40-55	0.5	0.5	0.75	1.0
	Below 40	1.0	1.0	1.5	1.5

(a) The pipe insulation thicknesses specified in this table are based on insulation R-values ranging from R-4 to R-4.6 per inch of thickness. For materials with an R-value greater than R-4.6, the insulation thickness specified in this table may be reduced as follows:

$$\textit{New Minimum Thickness} \; ' \; \frac{4.6 \; x \; \textit{Table 2\&2 Thickness}}{\textit{Actual R\&Value}}$$

For materials with an R-value less than R-4, the minimum insulation thickness must be increased as follows:

$$\textit{New Minimum Thickness} \; ' \; \frac{4.0 \; x \; \textit{Table 2\&2 Thickness}}{\textit{Actual R\&Value}}$$

(b) For piping exposed to outdoor air, increase thickness by 0.5 in.
(c) Applies to runouts not exceeding 12 ft in length to individual terminal units.

Minimum Insulation Thickness for Recirculation Piping

Heated Water Temperature (EF)	Insulation Thickness in Inches by Pipe Sizes[a]			
	Non-Circulating Runouts	Circulating Mains and Runouts		
	Up to 1 in.	Up to 1.25 in.	1.5 - 2.0 in.	Over 2 in.
170-180	0.5	1.0	1.5	2.0
140-160	0.5	0.5	1.0	1.5
100-130	0.5	0.5	0.5	1.0

(a) Nominal pipe size and insulation thickness.

Prescriptive Packages User's Guide

1992 MEC, 1993 MEC, and 1995 MEC

Inside This Guide

Quick Start
Step-By-Step Instructions
Steel-Frame Wall Equivalent R-Values
Mass Wall Equivalent R-Values
Compliance Example

Prescriptive Packages Overview

The MEC*check*™ Prescriptive Packages were developed to demonstrate compliance with the insulation and window requirements of the Council of American Building Officials (CABO) Model Energy Code (MEC). MEC*check* includes prescriptive packages that demonstrate compliance with the 1992, 1993, and 1995 editions of the MEC and the 1998 and 2000 editions of the International Energy Conservation Code (IECC). All illustrations in this chapter are based on packages which demonstrate compliance with the 1995 MEC. However, compliance with the other two editions is achieved similarly.

The prescriptive package approach requires minimal calculations and is the simplest method for demonstrating compliance with the code insulation and window requirements for residential buildings (refer to the *Basic Requirements Guide* for additional requirements that must also be satisfied).

The MEC*check* materials include prescriptive packages for both one- and two-family buildings (referred to as single-family buildings) and multifamily buildings (such as apartments, condominiums, townhouses, dormitories, and rowhouses). Multifamily buildings include residential buildings three stories or less in height with three or more attached dwelling units. When applying the prescriptive packages to multifamily buildings, it is recommended that the packages be applied to the entire building (as opposed to individual dwelling units) if allowed by your jurisdiction.

What's In This User's Guide?

A listing of counties by state and their corresponding climate zone number is provided in Appendix E. You will need to know the climate zone of your building in order to use the

prescriptive package approach. *The Prescriptive Package Worksheet* is included with this guide. Refer to this worksheet while reading the following sections.

Quick Start, provides brief instructions on using the prescriptive packages. These instructions are designed to get you up and running in no time.

Step-By-Step Instructions, provides more detailed instructions for finding your climate zone, selecting a prescriptive package, and documenting compliance using the *Prescriptive Package Worksheet*.

Steel-Frame Wall Equivalent R-Values provides equivalent R-value levels for steel-frame walls, and *Mass Wall Equivalent R-Values* provides equivalent R-value levels for mass walls. The prescriptive packages, which were designed for wood-frame walls, can be used for steel-frame or mass walls by substituting the R-values listed in Tables 1-4 for the R-value requirements in the prescriptive packages.

Compliance Example, provides a step-by-step example of using the prescriptive package approach to demonstrate compliance of a split-level house.

Quick Start

This section provides quick-and-easy instructions for using the MEC*check* prescriptive packages.

Find Your Climate Zone

The MEC*check* Prescriptive Packages give requirements for climate zones which fall along county boundaries. You can determine your climate zone from the list of counties given in Appendix E. State maps which indicate climate zones for each county are also available from the Internet or by contacting DOE's BSGP hotline at 1-800-270-CODE. Based on the county in which your building is located, find your climate zone.

Select a Prescriptive Package

Tables of prescriptive packages may have been included with this guide or may be downloaded separately from the Internet. The packages correspond to one of 19 climate zones. The requirements are different for each code edition, so be sure to use tables that correspond to the code edition being used in your jurisdiction.

Each climate zone has a table of prescriptive packages from which you can select one package. If your building meets the insulation R-value, glazing, and heating and/or cooling equipment efficiency requirements specified for the package you select, then the building complies with the code insulation and window requirements. Refer to the first page of the prescriptive package tables for notes that further clarify the requirements.

Complete the Prescriptive Package Worksheet

Fill in the *Prescriptive Package Worksheet* to document your building's compliance with the insulation and window requirements of the code. Be sure to include the climate zone number for your building's location, the prescriptive package number for the package you selected, and the code edition applicable to the selected package. Copy the glazing area percentage, R-value, and U-factor requirements specified in your selected package to the corresponding blanks on the right side of the worksheet. Write in the glazing area of your building and your proposed insulation R-values and glazing and door U-factors on the left side of the worksheet. If the package you selected requires high-efficiency heating or cooling equipment, record the efficiency, make, and model number of the equipment you intend to install.

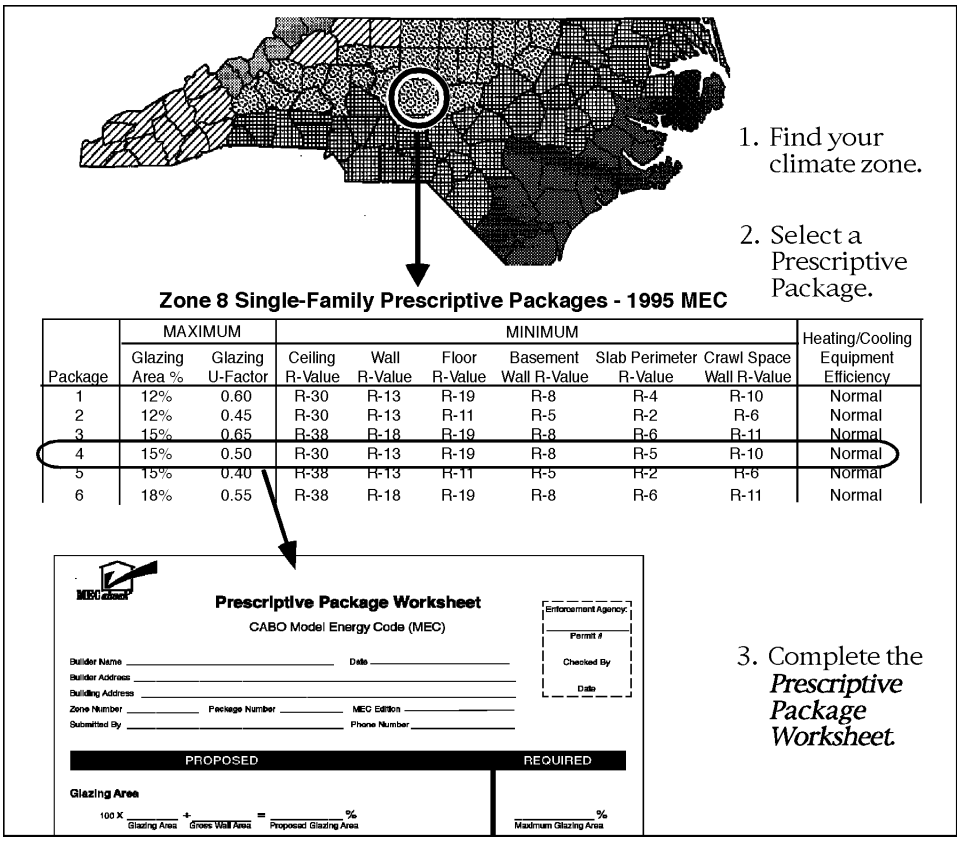

Figure 1. Using the Prescriptive Packages

Check for Compliance

Your building complies if:

- your glazing area is less than or equal to the required glazing area, and
- all proposed insulation R-values are greater than or equal to all required insulation R-values, and
- all proposed glazing and door U-factors are less than or equal to all required glazing and door U-factors, and
- your heating and cooling equipment meets the requirements specified for the package you selected (see Footnote 9).

Step-By-Step Instructions

The *Prescriptive Package Worksheet* included with this guide can be used to document compliance with the insulation and window requirements of the code. The following instructions explain how to complete this worksheet. Figure 2 shows an example *Prescriptive Package Worksheet*. The numbers in Figure 2 identify the various locations on this worksheet that correspond to the following steps.

Step 1: Find Your Climate Zone

The MEC*check* Prescriptive Packages give requirements for climate zones which fall along county boundaries. You can determine your climate zone from the list of counties given in Appendix E. State maps which indicate climate zones for each county are also available from the Internet or by contacting DOE's BSGP Hotline at 1-800-270-CODE. Based on the county in which your building is located, find your climate zone.

Step 2: Select a Prescriptive Package

The tables of prescriptive packages correspond to one of 19 climate zones. The requirements are different for each code edition, so be sure to use tables that correspond to the code edition being used in your jurisdiction. Locate the table of prescriptive packages for the climate zone you identified in Step 1.

Select a package for your building from this table. If your building meets the insulation R-value, glazing, and heating and cooling efficiency requirements specified by the package you select, then the building complies with the code insulation and window requirements. Refer to the first page of the prescriptive packages for notes that further clarify the requirements.

The glazing U-factor and the glazing area percentage listed for each package are the maximum allowed for that package. The area of a glazing assembly is the interior surface area of the entire assembly, including glazing, sash, curbing and other framing elements. The areas of all glazing assemblies (including windows, sliding glass doors, skylights, and windows of conditioned basements) must be included when computing the total glazing area (see Footnote 1).

The nominal area or rough opening is also acceptable for flat windows and doors. The glazing area and window U-factor requirements for any package can be altered by using the *Glazing Area/U-Factor Trade-Off Worksheet* (instructions are given on the worksheet). Use of this worksheet does not alter the insulation R-value and equipment efficiency requirements in the package.

The insulation R-values listed for each package are the minimum allowed for that package. R-value requirements refer to the R-value of the insulation only. Wall and ceiling insulation R-values refer to the sum of the stud cavity insulation plus insulated sheathing (if used). For example, an R-16 wall requirement can be met with R-13 cavity insulation and R-3 sheathing. It is important to select a package consistent with the proposed framing used in the building. For example, it would be impossible to comply with a package specifying R-38 ceiling insulation (approximately 12 in. thick) if the building plans include a cathedral ceiling with 2x8 framing (approximately 7.5 in. thick).

Some of the packages specify high-efficiency heating equipment (*High Heating*), or high-efficiency cooling equipment (*High Cooling*), or a combination of both (*High Heat/Cool*). High-efficiency heating units have an annual fuel utilization efficiency (AFUE) of at least 90% or a heating seasonal performance factor (HSPF) of at least 7.8. High-efficiency cooling units have a seasonal energy efficiency ratio (SEER) of at least 12.0. For example, if you intend to install a 10 SEER air conditioner and a 92% AFUE furnace, the *High Heating* packages would apply to your building, but *High Cooling* and *High Heat/Cool* packages would not. If you plan to install more than one piece of heating equipment or more than one piece of cooling equipment, the equipment with the lowest efficiency must meet or exceed the efficiency required by the selected package. AFUE, HSPF, and SEER ratings can be obtained from manufacturer data sheets or certified product directories.

Step 3: Complete the General Information Section

Fill in the information at the top of the *Prescriptive Package Worksheet*. Be sure to record your climate zone number, prescriptive package number, and code edition.

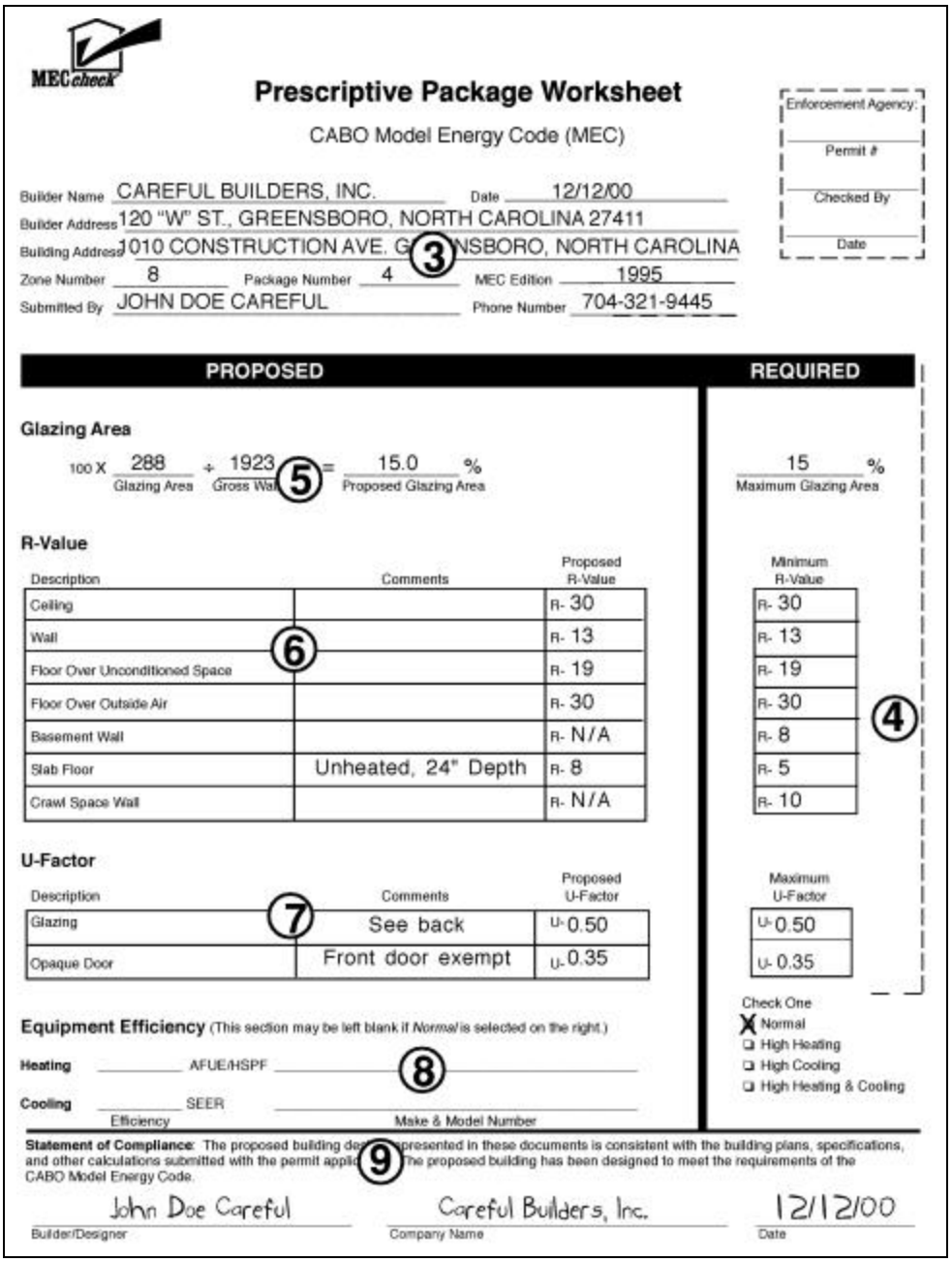

MECcheck

Prescriptive Package Worksheet

CABO Model Energy Code (MEC)

Enforcement Agency: ____ Permit # ____ Checked By ____ Date ____

Builder Name CAREFUL BUILDERS, INC. Date 12/12/00

Builder Address 120 "W" ST., GREENSBORO, NORTH CAROLINA 27411

Building Address 1010 CONSTRUCTION AVE. GREENSBORO, NORTH CAROLINA (3)

Zone Number 8 Package Number 4 MEC Edition 1995

Submitted By JOHN DOE CAREFUL Phone Number 704-321-9445

PROPOSED			REQUIRED
Glazing Area			
100 X 288 (Glazing Area) ÷ 1923 (Gross Wall) (5) = 15.0 % (Proposed Glazing Area)			15 % Maximum Glazing Area
R-Value			
Description	Comments	Proposed R-Value	Minimum R-Value
Ceiling		R- 30	R- 30
Wall	(6)	R- 13	R- 13
Floor Over Unconditioned Space		R- 19	R- 19
Floor Over Outside Air		R- 30	R- 30
Basement Wall		R- N/A	R- 8
Slab Floor	Unheated, 24" Depth	R- 8	R- 5
Crawl Space Wall		R- N/A	R- 10
U-Factor			
Description	Comments	Proposed U-Factor	Maximum U-Factor
Glazing (7)	See back	U- 0.50	U- 0.50
Opaque Door	Front door exempt	U- 0.35	U- 0.35

(4)

Equipment Efficiency (This section may be left blank if *Normal* is selected on the right.)

Heating ____ AFUE/HSPF ____ (8)

Cooling ____ SEER ____

Efficiency Make & Model Number

Check One
- X Normal
- ❑ High Heating
- ❑ High Cooling
- ❑ High Heating & Cooling

Statement of Compliance: The proposed building design presented in these documents is consistent with the building plans, specifications, and other calculations submitted with the permit application. The proposed building has been designed to meet the requirements of the CABO Model Energy Code. (9)

John Doe Careful — Builder/Designer

Careful Builders, Inc. — Company Name

12/12/00 — Date

Figure 2. Prescriptive Package Worksheet Step-by-Step (illustration based on 1995 MEC)

Step 4: Complete the Required Section

Copy the *Glazing Area* percentage from the prescriptive package you have chosen to the space labeled *Maximum Glazing Area*. Depending on the package you have selected, this percentage will range from 12% to 25% for single-family buildings or 15% to 30% for multifamily buildings.

Copy the insulation R-value and glazing U-factor requirements from the selected prescriptive package to the *Minimum R-Value* and *Maximum U-Factor* sections of the worksheet. The required R-value for floors over outside air is the same as that for ceilings, so copy the ceiling R-value requirement from the selected prescriptive package to the *Minimum R-Value* box for floors over outside air. The slab R-value requirement is for unheated slabs. In all locations except Zone 1, add an additional R-2 if you intend to install a heated slab. A heated slab has ducts or hydronic heating elements in or under the slab.

If high-efficiency heating equipment is specified in the package you have chosen, put an "X" in the box labeled *High Heating*. If high-efficiency cooling equipment is specified in the package you have chosen, put an "X" in the box labeled *High Cooling*. If both are specified, put an "X" in the box *labeled High Heating & Cooling*. If normal heating and cooling efficiency is specified in the package you selected, put an "X" in the box labeled *Normal*.

Step 5: Complete the Proposed Glazing Area Section

Calculate the total area (ft^2) of all glazing assemblies (windows, sliding glass doors, skylights, etc.) located in the building envelope. The area of an assembly is the interior surface area of the entire assembly, including glazing, sash, curbing, and other framing elements. The nominal area or rough opening is acceptable for flat windows. The area of windows in the exterior walls of conditioned basements should be included. Windows in unconditioned basements are *NOT* included. Record the total area of all applicable assemblies in the space labeled *Glazing Area*.

Next, calculate the gross wall area (ft^2) and record this area in the space labeled *Gross Wall Area*. The gross wall area includes the following:

- all above-grade walls enclosing conditioned spaces (including attic kneewalls and skylight shafts)
- the peripheral edges of the floors (the area of the band joist and perimeter framing between floors)
- walls of conditioned basements with an average depth less than 50% below grade (include the entire wall area – even the below-grade portions). For further clarification, refer to the basement wall examples given in Step 6.
- all windows and doors (including windows and doors in conditioned basements).

Divide the glazing area by the gross wall area and multiply by 100 to determine the *Proposed Glazing Area* percentage.

Step 6: Complete the Proposed R-Value Section

Record the proposed R-value of the insulation to be installed in each applicable ceiling, wall, floor, basement wall, slab-edge, and crawl space wall component in the *Proposed R-Value* column of the worksheet.

Multiple R-Values and U-Factors Some components may consist of more than one R-value (e.g., part of the ceiling may be insulated to R-38 and part to R-19). If each component R-value is greater than or equal to the required R-value, record the lowest component R-value. However, if one of the R-values is less than the required R-value, perform an area-weighted average R-value calculation using *the R-Value/U-Factor Weighted Average Worksheet*. If the resulting average R-value is greater than or equal to the required R-value, the component complies and the average R-value should be transferred to the *Prescriptive Package Worksheet*.

Some buildings will use more than one glazing or door U-factor (e.g., windows and sliding glass doors with different U-factors may both be installed). If each U-factor is less than or equal to the required U-factor, record the highest (in value) component U-factor. However, if one of the U-factors exceeds the maximum U-factor requirement, perform an area-weighted average U-factor calculation using the *R-Value/U-Factor Weighted Average Worksheet*. If the resulting average U-factor is less than or equal to the required U-factor, the component complies and the average U-factor should be transferred to the *Prescriptive Package Worksheet*.

Ceiling R-Value Proposed R-values for ceilings represent the sum of the cavity insulation plus insulating sheathing (if used). For ventilated ceilings, insulating sheathing must be placed between the conditioned space and the ventilated portion of the roof (typically applied to the trusses or rafters immediately behind the drywall or other ceiling finish material).

The ceiling R-value requirements do not assume a raised or oversized truss construction. If the insulation achieves the full insulation thickness over the plate lines of exterior walls, R-30 insulation may be used to meet an R-38 insulation requirement and R-38 insulation may be used to meet an R-49 insulation requirement (see Footnote 3). If you are taking credit for a raised or oversized truss, note this in the *Comments* section of the worksheet.

Wall R-Value R-values for walls represent the sum of the cavity insulation plus insulating sheathing (if used). The wall R-value requirements are for wood-frame walls. However, the packages may be adapted for steel-frame and mass walls by using Tables 1 through 4. The use of steel-frame or mass walls should be noted in the *Comments* section of the worksheet.

Floor R-Value Floors over unconditioned space include floors over unconditioned crawl spaces, basements, and garages. Floors over outside air include floor cantilevers, the floor of an elevated building, and floors of overhangs (such as the floor above a recessed entryway or open carport). Floors over outside air must meet the ceiling R-value requirement.

Basement R-Value Basement walls that enclose conditioned spaces must be insulated from the top of the basement wall to 10 ft below ground level or to the basement floor, whichever is less. If you intend to install insulation on both the exterior and interior of the wall, provide the sum of both R-values.

1992 1993 Walls of conditioned basements with an average depth 50% or more below grade are considered basement walls; walls over 50% above grade are considered above-grade walls and must meet the wall R-value requirement for the package.

1995 Any individual wall of a conditioned basement with an average depth 50% or more below grade is considered a basement wall; a wall over 50% above grade is considered an above-grade wall and must meet the wall R-value requirement for the package.

The following examples help to clarify the treatment of basements with wood kneewalls, walk-out basements, and basement walls constructed from specialty foundation systems.

Example 1: Wood Kneewalls

Assume a basement is to be constructed with 3-ft-high wood kneewalls built on a 5-ft-high concrete foundation. R-13 insulation will be installed in the wood kneewall cavities and R-5 rigid insulation will be installed on the concrete foundation walls. The wood kneewalls are completely above grade and fully insulated. The concrete foundation walls are 4 ft below grade and fully insulated.

Because each basement wall is at least 50% below grade, both the masonry foundation and the wood kneewalls must be insulated to at least the basement R-value requirement specified in the selected prescriptive package. If the basement wall R-value requirement in the selected prescriptive package is R-5 or less, both the wood kneewalls and the concrete foundation walls meet the requirement and you may enter R-5 for the proposed

R-value of the basement walls. If, however, the requirement is greater than R-5, you will have to perform an area-weighted average U-factor calculation using the *R-Value/U-Factor Weighted Average Worksheet* to verify that the average basement wall R-value meets or exceeds the required R-value.

Example 2: Walk-Out Basement

Assume an 8-ft basement is to be built on a slope so that the front wall is 7 ft below grade and the rear wall is totally above grade. The ground level along both side walls is sloped so that approximately 50% of each wall is below grade. The rear basement wall will be wood-frame construction with R-19 insulation. The other three walls will be concrete walls with R-10 insulation. All four walls will be fully insulated.

Because the front and side walls are at least 50% below grade, they must be insulated to at least the basement R-value requirement specified in the selected prescriptive package. The rear wall is not 50% below grade, however, and is therefore subject to the above-grade wall requirement. Note that the basement floor along the rear wall should be considered a slab-on-grade component. Slab insulation should be installed along the basement floor for the length of the rear wall. The slab insulation must meet or exceed the slab R-value requirement specified for the selected package.

Example 3: Specialty Foundation Systems

Manufacturers of insulating foam concrete form systems and pre-manufactured concrete panels with integrated insulation generally supply R-value ratings for the entire wall, not just the insulation. Where the R-value of the insulation alone is not known, the manufacturer overall wall R-value rating may be used.

Slab R-Value The prescriptive package slab R-value requirements are for unheated slabs. Add an additional R-2 for heated slabs, except in Zone 1 which does not require slab insulation. For packages with a slab insulation requirement, the insulation must extend a total linear distance of at least 24 in. in Zones 2-12 and 48 in. in Zones 13-19. In the *Comments* section, indicate whether the slab will be heated or unheated. A heated slab is a slab with ducts or hydronic heating elements in or under the slab.

Slab Insulation Depth Slab insulation can be installed using any of several different configurations. Refer to the definition of Slab Insulation for a description and illustration of acceptable configurations.

Crawl Space Wall R-Value The crawl space wall R-value requirements are for walls of unventilated crawl spaces (i.e., not directly vented to the outside). The crawl space wall insulation must extend from the top of the wall to the inside finished grade. If the inside finished grade is less than 12 inches (305 mm) below the outside finished grade or the vertical wall insulation stops less than 12 inches below the outside grade, the insulation must instead extend vertically and horizontally a minimum of 24 linear inches (601 mm) from the outside grade level. Figure 3 illustrates the crawl space wall insulation depth requirements.

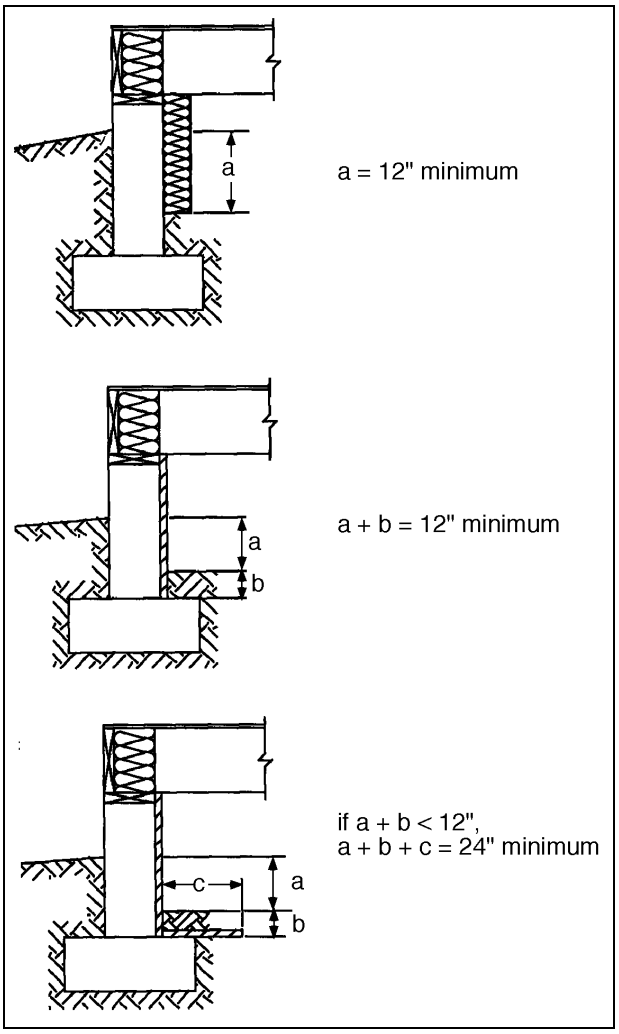

Figure 3. Crawl Space Wall Insulation Depth Requirement

Step 7: Complete the Proposed U-Factor Section

Glazing Record the proposed U-factors for glazing assemblies (such as windows, skylights, and sliding glass doors) in the *Proposed U-Factor* column of the worksheet. Up to 1% of the total allowed glazing area may be excluded from the U-factor requirement.

1992 1993 U-factors for glazing should be tested and documented by the manufacturer in accordance with the NFRC test procedure, taken from Appendix B, or derived from an alternate test procedure or table accepted by your local jurisdiction. Center-of-glass U-factors cannot be used.

1995 U-factors for glazing should be tested and documented by the manufacturer in accordance with the NFRC test procedure or taken from Appendix B. Center-of-glass U-factors cannot be used.

Doors In the *Proposed U-Factor* column of the worksheet, record the proposed U-factors for all opaque doors in the building envelope.

1992 1993 U-factors for doors must be based on manufacturer data, taken from Appendix B, or derived from an alternate test procedure or table accepted by your local jurisdiction.

1995 U-factors for doors must be tested and documented by the manufacturer in accordance with the NFRC test procedure or taken from Appendix B.

The U-factor requirement for all doors in the building envelope (regardless of the prescriptive package chosen) is 0.35. The prescriptive package approach allows you to exclude one door from this requirement. If more than one door fails to meet the 0.35 U-factor requirement, perform an area-weighted average U-factor calculation using the *R-Value/U-Factor Weighted Average Worksheet* (one door may also be excluded from this calculation). If a door contains glass and an aggregate U-factor rating for that door is not available, include the glass area of the door with your glazing and use the opaque door U-factor from Appendix B to determine compliance with the door.

Step 8: Complete Equipment Efficiency Section

If the *Heating/Cooling Equipment Efficiency* column is marked *Normal* for the package you have selected, leave this section blank. If high-efficiency heating or cooling equipment is specified in the package you select, record the proposed equipment efficiency in the space(s) labeled *Efficiency* and record the equipment make and model number in the space(s) labeled *Make and Model Number*. If you plan to install more than one piece of heating equipment or more than one piece of cooling equipment, you must enter the efficiency of the unit with the lowest rating.

Step 9: Check for Compliance

Compliance is achieved if:

- the *Proposed Glazing Area* percentage is less than or equal to the *Maximum Glazing Area* percentage, and
- all R-values in the *Proposed R-Value* column are greater than or equal to the corresponding values in the *Minimum R-Value* column, and
- all glazing and door U-factors in the *Proposed U-Factor* column are less than or equal to the corresponding values in the *Maximum U-Factor* column, and
- your selected package specifies *Normal* equipment; OR your package specifies *High Heating* equipment and your proposed heating equipment has an AFUE of at least 90% or an HSPF of at least 7.8; OR your package specifies *High Cooling* equipment and your proposed heating equipment has a SEER of at least 12; OR your package specifies *High Heat/Cool* and your proposed equipment meets both of the above-listed requirements.

If all components do not meet the requirements of the selected prescriptive package, you can select another package, modify the design to meet the selected package requirements, or select another compliance approach.

When you have completed the *Prescriptive Package Worksheet*, sign and date the worksheet in the blanks provided. Transfer the insulation R-values and glazing and door U-factors to the building plans or specifications. If you are taking credit for high-efficiency equipment, also transfer the efficiency, make, and model number of the equipment.

Steel-Frame Wall Equivalent R-Values

The MEC*check* Prescriptive Packages give R-value requirements for wood-frame walls. Steel-frame walls can comply with these requirements if equivalent cavity and sheathing insulation R-values are selected from the following tables. Use Table 1 for 16-in. O.C.

steel-frame wall constructions. Use Table 2 for 24-in. O.C. steel-frame wall constructions.

The left column lists the wood-frame wall R-value requirements specified in the prescriptive packages. The right column lists equivalent steel-frame wall cavity and sheathing R-value requirements. An equivalent steel wall must be insulated to one of the cavity plus sheathing R-value combinations listed to the right of the wood-frame wall requirement.

Example: A steel-frame house is being built to the specifications of the 1995 MEC Single-Family Prescriptive Package 5 in Zone 8. The wood-frame wall R-value requirement for this package is R-13. The steel-frame walls are to be 16-in. O.C. construction with R-5 sheathing. The Table 1 for the 1995 MEC indicates that R-11 cavity insulation must be installed. The other acceptable combinations are R-15 cavity insulation with R-4 sheathing and R-21 cavity insulation with R-3 sheathing.

1992 1993

Table 1. 16-in. O.C. Steel-Frame Wall Equivalent R-Values

Wood-Frame Wall R-Value	Equivalent Steel-Frame Wall Cavity and Sheathing R-Value(a)
R-11	R-0+R-10, R-11+R-5, R-15+R-4, R-21+R-3
R-13	R-11+R-6, R-15+R-5, R-21+R-4
R-14	R-11+R-7, R-15+R-6, R-19+R-5
R-15	R-11+R7, R-19+R-6, R-25+R-5
R-16	R-11+R-9, R-15+R-8, R-21+R-7
R-17	R-11+R-10, R-15+R-9, R-21+R-8
R-18	R-13+R-10, R-19+R-9, R-25+R-8
R-19	R-15+R-10, R-21+R-9
R-20	R-19+R-10, R-25+R-9
R-21	R-25+R-10
(a) The cavity insulation R-value requirement is listed first, followed by the sheathing R-value requirement.	

1992 1993

Table 2. 24-in. O.C. Steel-Frame Wall Equivalent R-Values

Wood-Frame Wall R-Value	Equivalent Steel-Frame Wall Cavity and Sheathing R-Value(a)
R-11	R-0+R-10, R-11+R-4, R-13+R-3, R-19+R-2, R-25+R-0
R-13	R-11+R-5, R-15+R-4, R-19+R-3, R-25+R-2
R-14	R-11+R-6, R-13+R-5, R-19+R-4, R-25+R-3
R-15	R-11+R6, R-15+R-5, R-19+R-4, R-25+R-3
R-16	R-11+R-8, R-15+R-7, R-19+R-6, R-25+R-5
R-17	R-11+R-9, R-13+R-8, R-19+R-7, R-25+R-6
R-18	R-11+R-10, R-13+R-9, R-15+R-8, R-21+R-7
R-19	R-11+R-10, R-15+R-9, R-19+R-8, R-25+R-7
R-20	R-13+R-10, R-15+R-9, R-21+R-8
R-21	R-15+R-10, R-19+R-9, R-25+R-8
(a) The cavity insulation R-value requirement is listed first, followed by the sheathing R-value requirement.	

1995 *Table 1. 16-in. O.C. Steel-Frame Wall Equivalent R-Values*

Wood-Frame Wall R-Value	Equivalent Steel-Frame Wall Cavity and Sheathing R-Value[(a)]
R-11	R-0+R-9, R-11+R-4, R-15+R-3, R-21+R-2
R-13	R-11+R-5, R-15+R-4, R-21+R-3
R-14	R-11+R-6, R-13+R-5, R-19+R-4
R-15	R-11+R6, R-15+R-5, R-19+R-4
R-16	R-11+R-8, R-15+R-7, R-21+R-6
R-17	R-11+R-9, R-13+R-8, R-19+R-7
R-18	R-11+R-9, R-15+R-8, R-21+R-7
R-19	R-11+R-10, R-13+R-9, R-19+R-8, R-25+R-7
R-20	R-11+R-10, R-13+R-9, R-19+R-8
R-21	R-13+R-10, R-19+R-9, R-25+R-8
R-22	R-13+R-10, R-19+R-9
R-24	R-19+R-10, R-25+R-9
R-25	R-19+R-10
R-26	R-19+R-11, R-21+R-10

(a) The cavity insulation R-value requirement is listed first, followed by the sheathing R-value requirement.

1995 *Table 2. 24-in. O.C. Steel-Frame Wall Equivalent R-Values*

Wood-Frame Wall R-Value	Equivalent Steel-Frame Wall Cavity and Sheathing R-Value[(a)]
R-11	R-0+R-9, R-11+R-3, R-15+R-2, R-25+R-0
R-13	R-11+R-4, R-15+R-3, R-19+R-2
R-14	R-11+R-5, R-13+R-4, R-15+R-3, R-21+R-2
R-15	R-11+R5, R-13+R-4, R-19+R-3, R-21+R-2
R-16	R-11+R-7, R-13+R-6, R-19+R-5, R-25+R-4
R-17	R-11+R-8, R-13+R-7, R-15+R-6, R-21+R-5
R-18	R-11+R-8, R-13+R-7, R-19+R-6, R-25+R-5
R-19	R-11+R-9, R-13+R-8, R-15+R-7, R-21+R-6
R-20	R-11+R-9, R-13+R-8, R-19+R-7, R-21+R-6
R-21	R-11+R-9, R-15+R-8, R-21+R-7
R-22	R-11+R-10, R-13+R-9, R-19+R-8, R-21+R-7
R-24	R-11+R-10, R-15+R-9, R-19+R-8
R-25	R13+R-10, R-19+R-9, R-21+R-8
R-26	R-15+R-10, R-19+R-9, R-25+R-8

(a) The cavity insulation R-value requirement is listed first, followed by the sheathing R-value requirement.

Mass Wall Equivalent R-Values

The MEC*check* Prescriptive Packages give R-value requirements for wood-frame walls. High mass walls in some locations have lower insulation requirements than wood-frame walls, with more credit given in warmer locations. The following tables can be used to determine the equivalent insulation requirements when high-mass walls are used instead of wood-frame walls. To qualify as a high-mass wall, the heat capacity of the exterior wall must be greater than or equal to 6 Btu/ft^2 °F [123 kJ/m^2 K)] of exterior wall area. Masonry and concrete walls having a mass greater than or equal to 30 lb/ft^2 (146 kg/m^2) and solid walls having a mass greater than or equal to 20 lb/ft^2 (98 kg/m^2) will meet this requirement.

Use Table 3 for mass walls with exterior or integral insulation and Table 4 for mass walls with interior insulation. The left column lists the wood-frame wall R-value requirements specified in the prescriptive packages. The right column lists equivalent mass wall insulation R-value requirements.

Example: A house with high-mass walls is being built to the specifications of Prescriptive Package 5 in Zone 8. The wood-frame wall R-value requirement for this package is R-13. The mass walls will have exterior insulation. Table 3 for the 1995 MEC indicates that in Zone 8, R-6 exterior insulation may be installed instead of R-13.

1992 1993

Table 3. High-Mass Wall Equivalent R-Values; Exterior or Integral Insulation for 1992 and 1993 MEC

Wood-Frame Wall R-Value	Equivalent High-Mass Wall R-Value					
	Zones 1 to 4	Zones 5 to 8	Zones 9 to 11	Zones 12 to 13	Zones 14 to 15	Zones 16 to 19
R-11	R-6	R-6	R-8	R-9	R-10	R-11
R-13	R-7	R-7	R-8	R-9	R-11	R-12
R-14	R-7	R-7	R-9	R-10	R-11	R-13
R-15	R-7	R-8	R-9	R-10	R-11	R-13
R-16	R-7	R-8	R-9	R-10	R-12	R-14
R-17	R-8	R-8	R-9	R-11	R-12	R-14
R-18	R-8	R-9	R-10	R-11	R-13	R-15
R-19	R-9	R-9	R-11	R-12	R-14	R-17
R-20	R-9	R-10	R-11	R-13	R-15	R-18
R-21	R-9	R-10	R-11	R-13	R-15	R-18
R-22	R-9	R-10	R-11	R-13	R-16	R-19
R-23	R-10	R-10	R-12	R-13	R-16	R-19
R-24	R-10	R-10	R-12	R-14	R-16	R-20
R-25	R-10	R-10	R-12	R-14	R-17	R-20
R-26	R-10	R-11	R-12	R-14	R-17	R-21

1992 1993 *Table 4. High-Mass Wall Equivalent R-Values; Interior Insulation for 1992 and 1995 MEC*

Wood-Frame Wall R-Value	Equivalent High-Mass Wall R-Value					
	Zones 1 to 4	Zones 5 to 8	Zones 9 to 11	Zones 12 to 13	Zones 14 to 15	Zones 16 to 19
R-11	R-11	R-11	R-12	R-12	R-14	R-14
R-13	R-13	R-13	R-13	R-14	R-15	R-15
R-14	R-14	R-14	R-14	R-15	R-16	R-16
R-15	R-15	R-15	R-15	R-16	R-16	R-16
R-16	R-15	R-15	R-15	R-16	R-16	R-16
R-17	R-15	R-15	R-15	R-17	R-17	R-17
R-18	R-16	R-16	R-16	R-18	R-18	R-18
R-19	R-18	R-18	R-18	R-22	R-22	R-22
R-20	R-20	R-20	R-20	R-22	R-22	R-22
R-21	R-21	R-21	R-21	R-23	R-23	R-23
R-22	R-22	R-22	R-22	R-24	R-24	R-24
R-23	R-22	R-22	R-22	R-24	R-24	R-24
R-24	R-23	R-23	R-23	R-25	R-25	R-25
R-25	R-24	R-24	R-24	R-25	R-25	R-25
R-26	R-25	R-25	R-25	R-26	R-26	R-26

1995 *Table 3. High-Mass Wall Equivalent R-Values; Exterior or Integral Insulation for 1995 MEC*

Wood-Frame Wall R-Value	Equivalent High-Mass Wall R-Value					
	Zones 1 to 4	Zones 5 to 8	Zones 9 to 11	Zones 12 to 13	Zones 14 to 15	Zones 16 to 19
R-11	R-6	R-6	R-7	R-8	R-9	R-10
R-13	R-6	R-6	R-8	R-9	R-10	R-11
R-14	R-6	R-7	R-8	R-9	R-10	R-11
R-15	R-7	R-7	R-8	R-9	R-10	R-12
R-16	R-7	R-7	R-8	R-9	R-11	R-12
R-17	R-7	R-7	R-9	R-10	R-11	R-13
R-18	R-7	R-7	R-9	R-10	R-11	R-13
R-19	R-8	R-9	R-10	R-11	R-13	R-15
R-20	R-8	R-9	R-10	R-11	R-13	R-16
R-21	R-8	R-9	R-10	R-12	R-14	R-16
R-22	R-8	R-9	R-10	R-12	R-14	R-17
R-23	R-9	R-9	R-11	R-12	R-14	R-17
R-24	R-9	R-9	R-11	R-12	R-14	R-27
R-25	R-9	R-10	R-11	R-13	R-15	R-18
R-26	R-9	R-10	R-11	R-13	R-15	R-18

1995 *Table 4. High-Mass Wall Equivalent R-Values; Interior Insulation for 1995 MEC*

Wood-Frame Wall R-Value	Equivalent High-Mass Wall R-Value					
	Zones 1 to 4	Zones 5 to 8	Zones 9 to 11	Zones 12 to 13	Zones 14 to 15	Zones 16 to 19
R-11	R-10	R-10	R-11	R-11	R-12	R-12
R-13	R-11	R-11	R-12	R-12	R-14	R-14
R-14	R-12	R-12	R-12	R-12	R-15	R-15
R-15	R-13	R-13	R-13	R-13	R-15	R-15
R-16	R-13	R-13	R-13	R-14	R-15	R-15
R-17	R-14	R-14	R-14	R-15	R-16	R-16
R-18	R-15	R-15	R-15	R-15	R-16	R-16
R-19	R-16	R-16	R-16	R-19	R-19	R-19
R-20	R-16	R-16	R-16	R-20	R-20	R-20
R-21	R-17	R-17	R-17	R-21	R-21	R-21
R-22	R-17	R-17	R-17	R-21	R-21	R-21
R-23	R-18	R-18	R-18	R-22	R-22	R-22
R-24	R-19	R-19	R-19	R-22	R-22	R-22
R-25	R-20	R-20	R-20	R-22	R-22	R-22
R-26	R-21	R-21	R-21	R-23	R-23	R-23

Compliance Example

Assume that you plan to build the single-family house shown in Figure 4 on a lot located in Greensboro, North Carolina. Greensboro is in Guilford County and is designated as Zone 8 (see Appendix E). For the purposes of this example, assume you have chosen Package 4 from the single-family prescriptive packages offered for Zone 8. Compliance for a multifamily building is handled in much the same way, only packages should be selected from the tables developed specifically for multifamily buildings.

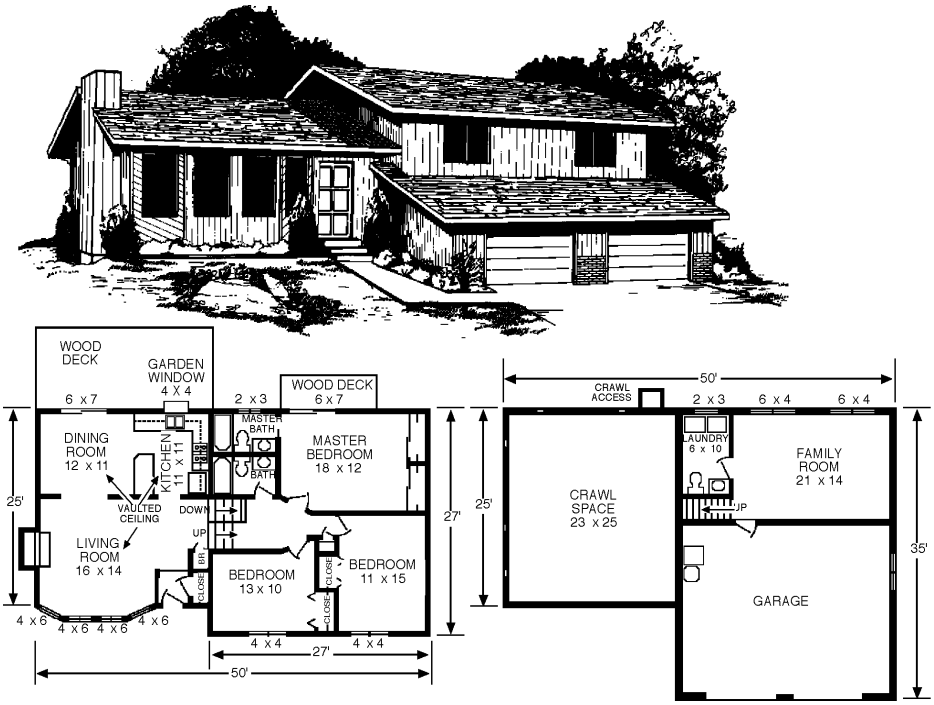

Figure 4. Example House

Table 5 lists the components that make up the building envelope, the dimensions of some of these components, and the proposed insulation R-values and window and door U-factors. Figure 5 shows how to determine the proposed and required R-values recorded on the *Prescriptive Package Worksheet*.

Table 5. Example House Specifications

Building Component	Area	Insulation Level
Ceilings With Attic (Std. Truss) Vaulted	 N/A N/A	 R-38 R-30
Walls (2x4 @ 16-in. O.C.) Without Sheathing(a) With Sheathing	 276 ft^2 (gross) 1647 ft^2 (gross)	 R-13 R-19 (R-13 cavity + R-6 sheathing)
Windows Sliding Glass Doors	204 ft^2 84 ft^2	U-0.45 U-0.61
Doors Entrance Garage to Family Room	 N/A N/A	 U-0.54 U-0.35
Floors Over Garage Over Crawl Space Slab (Unheated) Bay Window Floor	 N/A N/A N/A N/A	 R-19 R-19 R-8 (24-in. depth) R-30
(a) Walls without sheathing are located between the family room and the garage, the laundry room and the crawl space, and the garage and the living room.		

Determine Which Components are Part of the Building Envelope

The advantage of the prescriptive package approach over the trade-off approach and the software approach is that you are not required to know the areas of many of the building components (Table 1 lists only the areas that you will need). You ***DO*** need to compute a glazing area percentage, however, and this computation requires the gross wall area and total glazing area. Before you can determine the gross wall area of your building, you must first determine which walls are part of the building envelope and which are not. Only the building components that are part of the building envelope are relevant.

Building envelope components are those that separate conditioned spaces (heated or cooled rooms) from outside air or from unconditioned spaces (rooms that are neither heated nor cooled). Walls, floors, and other building components separating two conditioned spaces are ***NOT*** part of the building envelope.

Walls In this example, the garage is unconditioned, so the exterior garage walls are not part of the building envelope. The wall between the conditioned family room and the unconditioned garage is part of the building envelope, including the wall of the stairwell facing the garage. Likewise, the wall between the garage and the living room is part of the building envelope.

Part of the laundry room wall separates the laundry room from the crawl space and the other part separates the laundry room from the kitchen. The wall portion adjacent to the crawl space is part of the building envelope because it separates the conditioned laundry from the unconditioned crawl space. The wall portion adjacent to the kitchen can be ignored because it separates two conditioned spaces. The wall portion adjacent to the family room can also be ignored. Likewise, the wall between the upstairs bathrooms and the kitchen and the wall between the center bedroom and the living room are not part of the building envelope. Portions of both of these walls are also adjacent to outside air, and those portions are part of the building envelope. The following walls are part of the building envelope and their areas need to be included when computing the gross wall area:

- all walls between interior conditioned space and outside air
- the walls between the family room and the garage
- the walls between the garage and the living room
- the wall between the laundry room and the crawl space.

Ceilings The dining room, living room, bay window roof, and entryway have a vaulted ceiling that will be insulated to R-30. The rest of the home has a ceiling with attic which will be insulated to R-38.

Floors The floor of the bay window is considered a floor over outside air and must meet the ceiling R-value requirement. The floors over the garage and the crawl space are floors over unconditioned space, and must meet the floor R-value requirement. Because the floor over the crawl space is to be insulated, the crawl space is not part of the building envelope and the crawl space walls are not considered. The family room has a slab-on-grade floor which must meet the slab perimeter R-value requirement.

Glazing and Doors There are two sliding glass doors in the building envelope – one leading from the dining room to the larger deck and one leading from the master bedroom to the smaller deck. There are two opaque doors in the building envelope – the front entry door and the door leading from the garage into the family room.

Complete the Required Section

Transfer all of the requirements specified by Package 4 to the right side of the *Prescriptive Package Worksheet* (in the *REQUIRED* section). Record the maximum allowed glazing area (15% in this example) in the space labeled *Maximum Glazing Area*. Transfer the R-value and U-factor requirements from the package to the boxes under the *Minimum R-Value* and *Maximum U-Factor* columns. Note that floors over outside air must meet the prescriptive package ceiling R-value requirement (R-30 in this example), so the ceiling requirement is listed across from the *Floor Over Outside Air* component. The U-factor requirement for all doors is 0.35, so this value has been entered on the worksheet for you (one door may be exempted from this requirement). Package 4 specifies *Normal* heating equipment efficiency, so place an "X" in the *Normal* box.

Complete the Proposed R-Value Section

Record the R-values of the insulation that you intend to install in the *Proposed R-Value* column. These proposed values are listed in Table 5. The example house does not have a basement, so place "N/A" in the *Proposed R-Value* column for basement walls to indicate that they are not applicable. Although there is a crawl space, it is ventilated and the insulation will be installed on the floor over the crawl space, so place "N/A" in the *Proposed R-Value* column for crawl space walls as well.

Ceiling R-Value Two ceiling insulation R-values will be installed in the house. R-38 insulation is proposed for the flat ceiling below a vented attic and R-30 insulation is proposed for the vaulted ceiling. The selected package requires a minimum of R-30 ceiling insulation. Because the lowest proposed R-value (R-30 for the vaulted ceiling) is greater than or equal to the minimum required (also R-30), you may enter R-30 in the *Proposed R-Value* column for ceilings. You do not need to calculate an average R-value for ceilings. If the required ceiling R-value is greater than the R-value you plan to install in one part of the ceiling, but is less than the R-value you plan to install in another part of the ceiling, you may be able to meet or exceed the required ceiling R-value with the area-weighted average R-value. You can calculate this average R-value using the *R-Value/U-Factor Weighted Average Worksheet*.

R-30 insulation is proposed for the floor of the bay window (floors over outside air are subject to the ceiling R-value requirement). Enter R-30 in the *Proposed R-Value* column for floors over outside air.

Wall R-Value Most of the walls will be insulated with R-13 cavity insulation and covered with R-6 insulating sheathing. Cavity insulation and sheathing can be added together – in this case resulting in R-19. However, R-13 cavity insulation without sheathing will be installed on walls between

- the family room and the garage
- the laundry room and the crawl space
- the garage and the living room.

The selected package requires a minimum of R-13 wall insulation. Because the lowest proposed wall R-value (R-13) is greater than or equal to the minimum required (also R-13), you are not required to calculate an average R-value for walls. Enter R-13 in the *Proposed R-Value* column for walls.

Floor R-Value The floor above the crawl space and the floor over the garage are both floors over unconditioned space. Both of these floors will be insulated with R-19 batt insulation. Enter R-19 for the *Floor Over Unconditioned Space* component.

Slab R-Value Enter R-8 for the *Slab Floor* component. In the *Comments* column, indicate that the slab will be unheated. In all locations except Zone 1, heated slabs have more stringent requirements than unheated slabs (see Footnote 7). Also indicate the

depth of the insulation you intend to install (slab insulation must extend 24 in. in Zones 2-12 and 48 in. in Zones 13-19.

Complete the Proposed U-Factor Section

Glazing U-Factor Two different glazing U-factors were proposed. The windows have a U-factor of 0.45 and the sliding glass doors have a U-factor of 0.61, both of which have been rated and labeled by the manufacturer in accordance with the NFRC test procedure. Because 0.61 is greater than the maximum U-factor specified in the package (0.50), you must calculate an area-weighted average U-factor. Complete the *R-Value/U-Factor Weighted Average Worksheet* and transfer the results to the *Prescriptive Package Worksheet*. Figure 5 shows the portion of the *R-Value/U-Factor Weighted Average Worksheet* used to calculate the average glazing U-factor for this house (0.50). If both proposed U-factors had been less than or equal to the required U-factor, then the weighted-average computation would not have been necessary and you could have recorded the higher of the two U-factors.

Door U-Factor The U-factor requirement for all opaque doors (regardless of the prescriptive package chosen) is 0.35. The entry door has a U-factor of 0.54 and the door from the garage to the family room has a U-factor of 0.35. Therefore, the entry door does not meet the U-factor requirement and the garage door does meet it exactly. On average, the proposed door U-factors will clearly not comply with this or any other package. However, one door may be exempted from this requirement (see Note b). This exemption allows one door to exceed the 0.35 U-factor requirement. Because the entry door of the example house may be exempted and the garage door complies, record the U-factor of the garage door (0.35) as the *Proposed U-Factor* for the *Door* component. If more than one door had exceeded the door U-factor requirement, an area-weighted average of all non-exempted doors would have been necessary to show compliance.

Complete the Proposed Heating Efficiency Section

The selected package does not require high-efficiency equipment. You may leave this section blank.

Check for Compliance

To verify compliance with the requirements of Prescriptive Package 4 for Zone 8, compare the *PROPOSED* and *REQUIRED* sections of the *Prescriptive Package Worksheet*.

- The *Proposed Glazing Area* is less than or equal to the allowed *Maximum Glazing Area*, and
- the *Proposed R-Values* for each of the building components are greater than or equal to the required *Minimum R-Values*, and
- the *Proposed U-Factors* for glazing and doors are less than or equal to the required *Maximum U-Factors*, and
- there are no equipment efficiency requirements.

You have demonstrated that your building design complies with the code insulation and window requirements (congratulations!). Sign and date the worksheet.

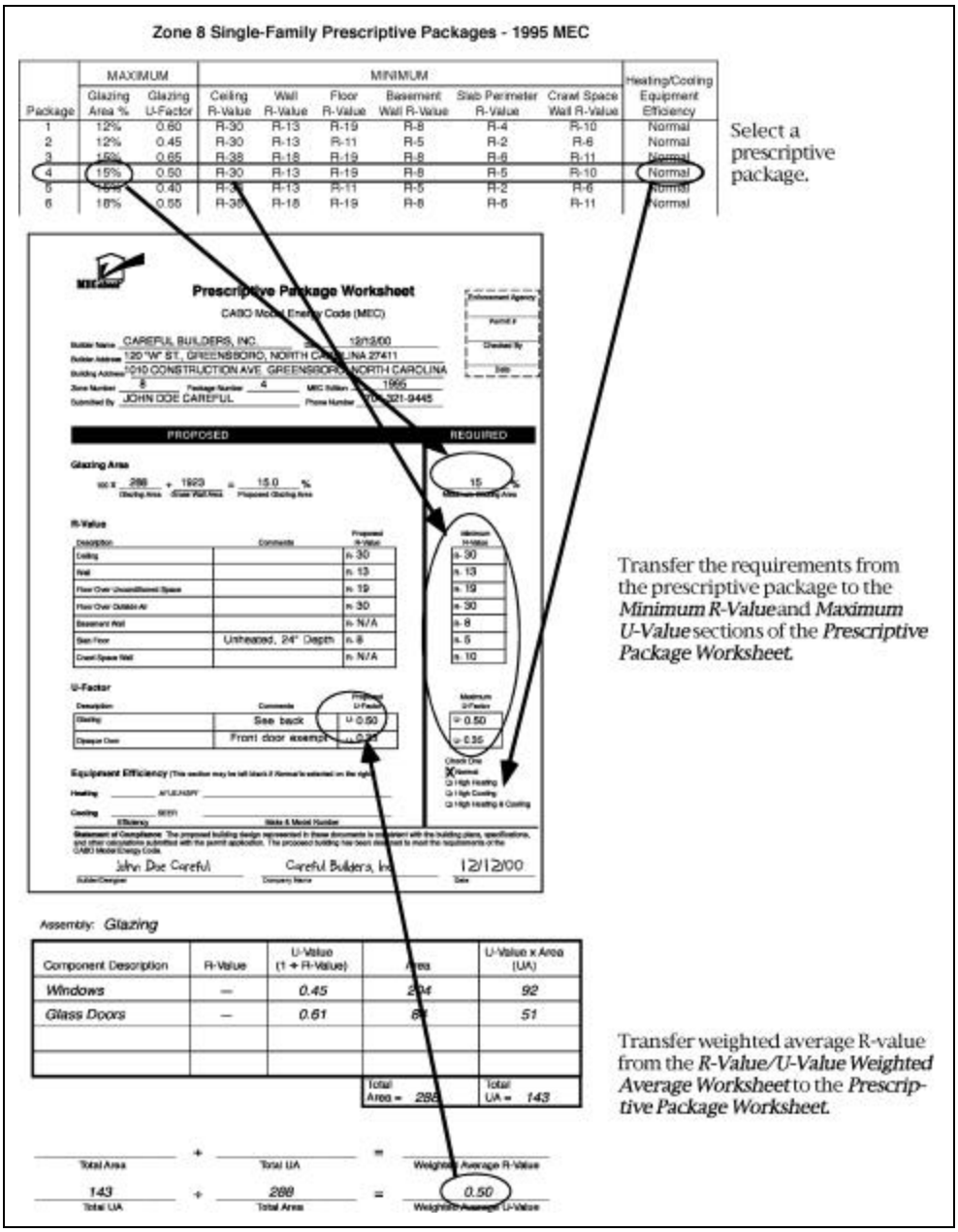

Figure 5. Determining Proposed and Required R-Values and U-Factors

MECcheck

Prescriptive Package Worksheet

CABO Model Energy Code (MEC)

Enforcement Agency: _____

Permit # _____

Checked By _____

Date _____

Builder Name _____ Date _____

Builder Address _____

Building Address _____

Zone Number _____ Package Number _____ MEC Edition _____

Submitted By _____ Phone Number _____

PROPOSED | **REQUIRED**

Glazing Area

100 X _____ ÷ _____ = _____ %

Glazing Area / Gross Wall Area / Proposed Glazing Area

_____ %

Maximum Glazing Area

R-Value

Description	Comments	Proposed R-Value	Minimum R-Value
Ceiling		R-	R-
Wall		R-	R-
Floor Over Unconditioned Space		R-	R-
Floor Over Outside Air		R-	R-
Basement Wall		R-	R-
Slab Floor		R-	R-
Crawl Space Wall		R-	R-

U-Factor

Description	Comments	Proposed U-Factor	Maximum U-Factor
Glazing		U-	U-
Opaque Door		U-	U- 0.35

Equipment Efficiency (This section may be left blank if *Normal* is selected on the right.)

Heating _____ AFUE/HSPF _____

Cooling _____ SEER _____

Efficiency / Make & Model Number

Check One

- ❑ Normal
- ❑ High Heating
- ❑ High Cooling
- ❑ High Heating & Cooling

Statement of Compliance: The proposed building design represented in these documents is consistent with the building plans, specifications, and other calculations submitted with the permit application. The proposed building has been designed to meet the requirements of the CABO Model Energy Code.

Builder/Designer _____ Company Name _____ Date _____

R-Value/U-Factor
Weighted Average Worksheet

(optional)

Assembly:

Component Description	R-Value	U-Factor (1 ÷ R-Value)	Area	U-Factor x Area (UA)
			Total Area =	Total UA =

_____ ÷ _____ = _____
Total Area — Total UA — Weighted Average R-Value

_____ ÷ _____ = _____
Total UA — Total Area — Weighted Average U-Factor

Assembly:

Component Description	R-Value	U-Factor (1 ÷ R-Value)	Area	U-Factor x Area (UA)
			Total Area =	Total UA =

_____ ÷ _____ = _____
Total Area — Total UA — Weighted Average R-Value

_____ ÷ _____ = _____
Total UA — Total Area — Weighted Average U-Factor

R-Value/U-Factor Weighted Average Worksheet: Examples

This worksheet can be used to calculate the average R-value of two or more building components of the same type but with different R-values, or to calculate the average U-factor of two or more glazing or door components with different U-factors.

R-Value Example: Our example has a ceiling with attic component insulated to R-38 and covering 729 ft^2, and a vaulted ceiling component insulated to R-30 and covering 592 ft^2. After entering these values and performing the indicated calculations, the weighted average R-value for these components is determined to be R-34.3. These two ceiling components, taken together, will meet the requirements of any prescriptive package that has a ceiling R-value requirement of R-34 or less.

Assembly: *Ceilings*

Component Description	R-Value	U-Factor (1 ÷ R-Value)	Area	U-Factor x Area (UA)
with Attic	*38*	*0.026*	*729*	*19.0*
Vaulted	*30*	*0.033*	*592*	*19.5*
			Total Area = *1321*	Total UA = *38.5*

1321 (Total Area) + *38.5* (Total UA) = *34.3* (Weighted Average R-Value)

(Total UA) + (Total Area) = (Weighted Average U-Factor)

U-Factor Example: Our example house has two glazing components; windows with a U-factor of 0.45 and a combined area of 204 ft^2 and sliding glass doors with a U-factor of 0.61 and a total area of 84 ft^2. After entering these values and performing the indicated calculations, the weighted average U-factor for these components is determined to be 0.50. These two glazing components, taken together, will meet the requirements of any prescriptive package that has a glazing U-factor requirement of 0.50 or higher.

Assembly: *Glazing*

Component Description	R-Value	U-Factor (1 ÷ R-Value)	Area	U-Factor x Area (UA)
Windows	—	*0.45*	*204*	*92*
Glass Doors	—	*0.61*	*84*	*51*
			Total Area = *288*	Total UA = *143*

(Total Area) + (Total UA) = (Weighted Average R-Value)

143 (Total UA) + *288* (Total Area) = *0.50* (Weighted Average U-Factor)

Glazing Area/U-Factor Trade-Off Worksheet
(optional)

The glazing area and U-factor requirements for any prescriptive package can be altered to better meet your building design. Any combination of area and U-factor that satisfies the following relationship can be used:

New Area x New U-Factor # Package Area x Package U-Factor

Where *Package Area* and *Package U-Factor* are the area and U-Factor in the prescriptive package you have selected and *New Area* and *New U-Factor* are your altered glazing and U-factor combination.

Fill in the following blanks and attach this worksheet to the *Prescriptive Package Worksheet*. See the back side of this worksheet for examples.

Zone Number _____ Package Number _____

MEC Edition _____

Package Glazing Requirements:

_____ x _____ = _____
Glazing Area % Glazing U-Factor Package Glazing Total

New Glazing Requirements:

_____ x _____ = _____
Glazing Area % Glazing U-Factor New Glazing Total

} *New Glazing Total* must be less than or equal to *Package Glazing Total*.

Example 1 (based on 1995 Single Family Packages):

Refer to the single family prescriptive packages for Zone 8. Package 3 lists a maximum glazing area percentage of 15% and a maximum U-factor of 0.65. The *Package Glazing Total* (area x U-factor) for this package is 9.8. Assume, however, that your building design calls for a glazing area of 17%. To determine the maximum allowable U-factor for a 17% glazing area, divide the *Package Glazing Total* by 17%:

New Glazing U-Factor = (15 x 0.65) ÷ 17 = 0.57

The new glazing requirements are a glazing area percentage of 17% and a U-factor of 0.57.

Zone Number *8* Package Number *3*

MEC Edition *1995*

Package Glazing Requirements:

Glazing Area %	x	Glazing U-Factor	=	Package Glazing Total
15		*0.65*		*9.8*

New Glazing Requirements:

Glazing Area %	x	Glazing U-Factor	=	New Glazing Total
17		*0.57*		*9.7*

New Glazing Total must be less than or equal to *Package Glazing Total*.

Example 2 (based on 1995 Single-Family Packages):

The *Glazing Area/U-Factor Trade-Off Worksheet* is also useful if you prefer to install windows with a U-factor that is different from the package requirement. As in the previous example, assume that you have selected Package 3 from Zone 8, but prefer to use windows with a U-factor of 0.72. To determine the maximum allowable area for windows with a U-factor of 0.72, divide the *Package Glazing Total* by 0.72:

New Window U-Factor = (15 x 0.65) ÷ 17 = 0.57

The new glazing requirements are a glazing area percentage of 13.5% and a U-factor of 0.72.

Zone Number *8* Package Number *3*

MEC Edition *1995*

Package Glazing Requirements:

Glazing Area %	x	Glazing U-Factor	=	Package Glazing Total
15		*0.65*		*9.8*

New Glazing Requirements:

Glazing Area %	x	Glazing U-Factor	=	New Glazing Total
13.5		*0.72*		*9.7*

New Glazing Total must be less than or equal to *Package Glazing Total*.

Appendix A: Additions

1992 MEC, 1993 MEC, and 1995 MEC

What is an Addition?

Additions to existing buildings must comply with code requirements when the addition is within the scope of the code and would not otherwise be exempted. Although not specifically defined in the code, building codes typically define an addition as any increase in a building's habitable floor area (which can be interpreted as any increase in the conditioned floor area).

Additions include new construction, such as a conditioned bedroom, sunspace, or enclosed porch added to an existing building. Additions also include existing spaces converted from unconditioned or exempt spaces to conditioned spaces.

For example, a finished basement, an attic converted to a bedroom, and a carport converted to a den, are additions. An unconditioned garage converted to a bedroom is an addition, but the addition of an unconditioned garage would not be considered within the scope of the code, since the code applies to heated or cooled (conditioned) spaces. If a conditioned floor area is expanded, such as a room made larger by moving out a wall, only the newly conditioned space must meet the code. A flat window added to a room does not increase the conditioned space and thus is not an addition by this definition.
Compliance Options for Additions

The addition (the newly conditioned floor space) complies with the code if it complies with all of the applicable code requirements. For example, requirements applicable to the addition of a new room would most likely include insulating the exterior walls, ceiling, and floor to the levels specified in the code; sealing all joints and penetrations; installing a vapor retarder in unventilated framed walls, floors, and ceilings; identifying installed insulation R-values and window U-factors; and insulating and sealing any ducts in unconditioned portions or exterior components (walls, ceilings, or floors) of the new space.

There are three approaches by which an addition can comply with the code:

- The addition as defined above meets all code requirements. This approach does not require that the original portion of the building meet code requirements.
- If the building with the addition complies with the code, the addition will also comply, regardless of whether the addition complies alone. For example, a sunroom that does not comply with the code is added to a house. If the entire house (with the sunroom) complies, the addition also complies.

- The addition, including possible concurrent renovation, does not increase the whole building UA or energy use. The change in UA or energy use can be shown by any of the commonly used code compliance tools. For example, additions that add rooms while simultaneously upgrading the existing HVAC system, windows, and/or insulation often reduce the energy use or UA of the existing part of the home, more than offsetting the added space to the home.

Appendix B: Default U-Factors

1992 MEC, 1993 MEC, and 1995 MEC

Glazing and Door Defaults

The following tables provide default U-factors for glazing and doors based on the glazing or door features. The U-factors in these tables can be used in the absence of NFRC-labeled values.

Glazing and doors cannot receive credit for features that cannot be clearly detected, such as argon gas fills and low-emissivity (low-E) coatings. Windows with these features may achieve much lower U-factors than those listed in Table 1. For example, a double-pane wood or vinyl window with low-E glass may have a U-factor around 0.38. The same window with argon gas may be rated at 0.34. Therefore, it may be advantageous to use tested, documented, and labeled U-factors for these types of windows.

Where a composite of materials from two different product types is used, the window or door must be assigned the higher U-factor.

Table 1. U-Factors for Windows, Glazed Doors, and Skylights

Frame/Glazing Features	Single Pane	Double Pane
Metal Without Thermal Break		
Operable	1.30	0.87
Fixed	1.17	0.69
Door	1.26	0.80
Skylight	2.02	1.30
Metal With Thermal Break		
Operable	1.07	0.67
Fixed	1.11	0.63
Door	1.10	0.66
Skylight	1.93	1.13
Metal-Clad Wood		
Operable	0.98	0.60
Fixed	1.05	0.58
Door	0.99	0.57
Skylight	1.50	0.88
Wood/Vinyl		
Operable	0.94	0.56
Fixed	1.04	0.57
Door	0.98	0.56
Skylight	1.47	0.85
Glass Block Assemblies	0.60	

Table 2. U-Factors for Non-Glazed Doors

Steel Doors		
Without Foam Core	0.60	
With Foam Core	0.35	
Wood Doors	**Without Storm**	**With Storm**
Panel With 7/16-in. Panels	0.54	0.36
Hollow Core Flush	0.46	0.32
Panel With 1 1/8-in. Panels	0.39	0.28
Solid Core Flush	0.40	0.26

Appendix C: Building Envelope

1992 MEC, 1993 MEC, and 1995 MEC

What Is The Building Envelope?

The code requirements are intended to limit heat loss and air leakage through the building envelope. The building envelope includes all of the building components that separate conditioned spaces from unconditioned spaces or from outside air. For example, the walls and doors between an unheated garage and a living area are part of the building envelope; the walls separating an unheated garage from the outside are not. Walls, floors, and other building components separating two conditioned spaces (such as an interior partition wall) are *NOT* part of the building envelope, nor are common or party walls which separate dwelling units in multifamily buildings.

You can think of the building envelope as the boundary separating the inside from the outside and through which heat is transferred. Areas that have no heating or cooling sources are considered to be outside the building envelope. A space is conditioned if heating and/or cooling is deliberately supplied to it or is indirectly supplied through uninsulated surfaces of water or heating equipment or through uninsulated ducts.

To use the MEC*check* materials, you must specify proposed insulation levels for ceiling, wall, floor, basement wall, slab-edge, and crawl space wall components located in the building envelope. In some case it may be unclear how to classify a given building element. For example, are skylight shafts considered a wall component or a ceiling component? The following table can be used to help determine how a given building envelope assembly should be entered in the MEC*check* materials.

Ceiling Components

Ceiling	Flat ceilings Cathedral or vaulted ceilings Dormer roofs Bay window roofs Overhead portions of an interior stairway to an attic Access doors or hatches Treyed ceilings
Floors Over Outside Air(a)	Floors of overhangs (such as the floor above a recessed entryway or carport) Floor cantilevers Floors of an elevated home Bay window sill Access doors or hatches
Skylights	Skylight assemblies less than 60° from horizontal
(a) The insulation requirements for floors over outside air are the same as those for ceilings.	

Wall Components

Wall	Opaque portions of above-grade walls Basement walls and kneewalls less than 50% below grade Peripheral edges of floors Between floor spandrels Gables walls bounding conditioned space Dormer walls Walls enclosing a mansard roof Roof or attic kneewalls Through-wall chimneys Walls of an interior stairway to an unconditioned basement Skylight shafts Sloped building components 60° or greater from horizontal
Glazing	Windows (including windows of conditioned basements)
Door	Opaque portions of all doors (including basement doors)

Floor and Foundation Components

Floor Over Unconditioned Space	Floors over an unconditioned crawl space, basement, garage, or similar unconditioned space Access doors or hatches
Basement Wall	Opaque portions of basement walls 50% or more below grade and basement kneewalls (if part of a basement wall 50% or more below grade)
Slab Floor	Perimeter edges of slab-on-grade floors
Crawl Space Wall	Walls of unventilated crawl spaces below uninsulated floors

Appendix D: Forms

1998 IECC and 2000 IECC

Energy Label and Take-Off Worksheet

The following forms are included in this Appendix:

- *Energy Label* – Describes the energy efficiency features installed in the residence. This label is optional. It may be posted at the building site or provided to the home buyer.
- *Take-Off Worksheet* – Provides a form for building take-offs.

Energy Label

MECcheck

Street Address _____

This home includes the following energy features:

Insulation R-Values

Insulating Sheathing	R-Value	
_____	_____	Ceiling
_____	_____	Ceiling
_____	_____	Wall
_____	_____	Wall
	_____	Floor
	_____	Basement Wall
	_____	Crawl Space Wall
	_____	Slab
	_____	Duct

Glazing/Door U-Factors

U-Factor	
_____	Windows
_____	Windows
_____	Sliding Glass Doors
_____	Doors
_____	Doors

Mechanical System	Type and Fuel	Efficiency
Heating System	_____	_____
Cooling System	_____	_____ SEER
Water Heater	_____	_____ EF

Other Energy Features

_____

_____

_____

_____

Builder _____ Date _____

Version 3.0; April 2000
U.S. Dept. of Housing and Urban Development / Rural Economic and Community Development
U.S. Dept. of Energy / Pacific Northwest National Laboratory

Take-Off Worksheet

Builder Name _____ Date _____

Builder Address _____

Building Address _____

Submitted By _____ Phone Number _____

Ceilings, Skylights, and Floors Over Outside Air

Description	Area	Insulation R-Value	Skylight U-Factor
Ceiling	ft^2		—
Floor Over Outside Air	ft^2		—
Skyulight	ft^2	—	

Walls, Windows, and Doors

Description	Area	Insulation R-Value	Glazing/Door U-Factor
Wall	ft^2		—
Window	ft^2	—	
Door	ft^2	—	
Sliding Glass Door	ft^2	—	

Floors and Foundations

Description	Area or Perimeter	Insulation R-Value	Insulation Depth
Floor Over Unconditioned Space	ft^2		—
Basement Wall	ft^2		
Unheated Slab	ft		
Heated Slab	ft		
Crawl Space Wall	ft^2		

Equipment Efficiency (This section may be left blank if no credit will be taken for high-efficiency equipment.)

Heating _____ AFUE/HSPF _____

Cooling _____ SEER _____

Efficiency — Make & Model Number

Appendix E: Climate Zones by States and Counties

County	Zone
ALABAMA	
Autauga (H)	6
Baldwin (H)	4
Barbour (H)	5
Bibb (H)	6
Blount	7
Bullock (H)	5
Butler (H)	5
Calhoun (H)	6
Chambers (H)	6
Cherokee	7
Chilton (H)	6
Choctaw (H)	5
Clarke (H)	5
Clay	7
Cleburne	7
Coffee (H)	4
Colbert	8
Conecuh (H)	5
Coosa (H)	6
Covington (H)	4
Crenshaw (H)	5
Cullman	7
Dale (H)	4
Dallas (H)	5
De Kalb	8
Elmore (H)	6
Escambia (H)	4
Etowah	7
Fayette	7
Franklin	8
Geneva (H)	4
Greene (H)	5
Hale (H)	5
Henry (H)	4
Houston (H)	4
Jackson	8
Jefferson (H)	6
Lamar	7
Lauderdale	8
Lawrence	8
Lee (H)	6
Limestone	8
Lowndes (H)	5
Macon (H)	6
Madison	8
Marengo (H)	5
Marion	7
Marshall	8
Mobile (H)	4
Monroe (H)	5
Montgomery (H)	6
Morgan	8
Perry (H)	5
Pickens (H)	6
Pike (H)	5
Randolph	7
Russell (H)	5
Shelby (H)	6
St Clair (H)	6
Sumter (H)	5
Talladega (H)	6
Tallapoosa (H)	6
Tuscaloosa (H)	6
Walker (H)	6
Washington (H)	5
Wilcox (H)	5
Winston	7
ALASKA BUROUGHS AND REAA's	
Adak Region	16
Alaska Gateway	19
Aleutian Region	17
Aleutians East	17
Anchorage	17
Annette Island	15
Bering Straits	19
Bristol Bay	17
Chatham	16
Chugach	17
Copper River	18
Delta/Greely	18
Denali	18
Fairbanks N. Star	18
Haines	16
Iditarod Area	19
Juneau	16
Kashunamiut	18
Kenai Peninsula	17
Ketchikan Gateway	15
Kodiak Island	16
Kuspuk	18
Lake & Peninsula	17
Lower Kuskokwim	18
Lower Yukon	18
Matanuska-Susitna	17
North Slope	19
Northwest Arctic	19
Pribilof Islands	17
Sitka	15
Southeast Island	15
Southwest Region	17
Yakutat	17
Yukon Flats	19
Yukon-Koyukuk	19
Yupiit	18
ARIZONA	
Apache	13
Cochise	6
Coconino	14
Gila	8
Graham	6
Greenlee	6
La Paz	3
Maricopa	3
Mohave	7
Navajo	10
Pima	4
Pinal	4
Santa Cruz	6
Yavapai	10
Yuma	3
ARKANSAS	
Arkansas (H)	6
Ashley (H)	6
Baxter	9
Benton	9
Boone	9
Bradley (H)	6
Calhoun (H)	6
Carroll	9
Chicot (H)	6
Clark (H)	6
Clay	8
Cleburne	8
Cleveland (H)	6
Columbia (H)	6
Conway (H)	7
Craighead	8
Crawford	8
Crittenden (H)	7
Cross (H)	7
Dallas (H)	6
Desha (H)	6
Drew (H)	6
Faulkner (H)	7
Franklin	8
Fulton	8
Garland (H)	7
Grant (H)	6
Greene	8
Hempstead (H)	7
Hot Spring (H)	7
Howard (H)	7
Independence	8
Izard	8
Jackson	8
Jefferson (H)	6
Johnson	8
Lafayette (H)	6
Lawrence	8
Lee (H)	7
Lincoln (H)	6
Little River (H)	6
Logan (H)	7
Lonoke (H)	7
Madison	9
Marion	9
Miller (H)	6
Mississippi	8
Monroe (H)	7
Montgomery	8
Nevada (H)	6
Newton	9
Ouachita (H)	6
Perry (H)	7
Phillips (H)	7
Pike (H)	7
Poinsett	8
Polk	8
Pope	8
Prairie (H)	7
Pulaski (H)	7
Randolph	8
Saline (H)	7
Scott (H)	7
Searcy	9
Sebastian	8
Sevier (H)	7
Sharp	8
St Francis (H)	7
Stone	9
Union (H)	6
Van Buren	8
Washington	9
White (H)	7
Woodruff (H)	7
Yell (H)	7
CALIFORNIA	
Alameda	6
Alpine	15
Amador	8
Butte	6
Calaveras	8
Colusa	6
Contra Costa	6
Del Norte	9
El Dorado	8
Fresno	6
Glenn	6
Humboldt	9
Imperial	3
Inyo	9
Kern	5
Kings	6
Lake	8
Lassen	13
Los Angeles	4
Madera	6
Marin	6
Mariposa	8
Mendocino	8
Merced	6
Modoc	15
Mono	15
Monterey	6

"Hot and humid" counties exempt from the vapor retarder requirement are marked with an "(H)"

County	Zone
Napa	6
Nevada	11
Orange	4
Placer	8
Plumas	13
Riverside	4
Sacramento	6
San Benito	6
San Bernardino	4
San Diego	3
San Francisco	6
San Joaquin	6
San Luis Obispo	6
San Mateo	6
Santa Barbara	5
Santa Clara	6
Santa Cruz	6
Shasta	6
Sierra	11
Siskiyou	11
Solano	6
Sonoma	6
Stanislaus	6
Sutter	6
Tehama	6
Trinity	9
Tulare	6
Tuolumne	8
Ventura	4
Yolo	6
Yuba	6
COLORADO	
Adams	13
Alamosa	16
Arapahoe	13
Archuleta	16
Baca	11
Bent	11
Boulder	13
Chaffee	16
Cheyenne	13
Clear Creek	17
Conejos	16
Costilla	16
Crowley	11
Custer	16
Delta	13
Denver	13
Dolores	15
Douglas	13
Eagle	15
El Paso	13
Elbert	13
Fremont	11
Garfield	15
Gilpin	13

County	Zone
Grand	17
Gunnison	17
Hinsdale	17
Huerfano	11
Jackson	17
Jefferson	13
Kiowa	13
Kit Carson	13
La Plata	15
Lake	17
Larimer	13
Las Animas	11
Lincoln	13
Logan	13
Mesa	13
Mineral	17
Moffat	15
Montezuma	15
Montrose	13
Morgan	13
Otero	11
Ouray	15
Park	17
Phillips	13
Pitkin	17
Prowers	11
Pueblo	11
Rio Blanco	15
Rio Grande	17
Routt	17
Saguache	16
San Juan	17
San Miguel	15
Sedgwick	13
Summit	17
Teller	13
Washington	13
Weld	13
Yuma	13
CONNECTICUT	
Fairfield	12
Hartford	13
Litchfield	14
Middlesex	12
New Haven	12
New London	12
Tolland	14
Windham	14
DELAWARE	
Kent	9
New Castle	10
Sussex	9
DC	
Washington	10

County	Zone
FLORIDA	
Alachua (H)	3
Baker (H)	3
Bay (H)	4
Bradford (H)	3
Brevard (H)	2
Broward (H)	1
Calhoun (H)	4
Charlotte (H)	2
Citrus (H)	2
Clay (H)	3
Collier (H)	1
Columbia (H)	3
Dade (H)	1
De Soto (H)	2
Dixie (H)	3
Duval (H)	3
Escambia (H)	4
Flagler (H)	3
Franklin (H)	4
Gadsden (H)	4
Gilchrist (H)	3
Glades (H)	1
Gulf (H)	4
Hamilton (H)	3
Hardee (H)	2
Hendry (H)	1
Hernando (H)	2
Highlands (H)	2
Hillsborough (H)	2
Holmes (H)	4
Indian River (H)	2
Jackson (H)	4
Jefferson (H)	4
Lafayette (H)	3
Lake (H)	2
Lee (H)	1
Leon (H)	4
Levy (H)	2
Liberty (H)	4
Madison (H)	3
Manatee (H)	2
Marion (H)	2
Martin (H)	1
Monroe (H)	1
Nassau (H)	3
Okaloosa (H)	4
Okeechobee (H)	2
Orange (H)	2
Osceola (H)	2
Palm Beach (H)	1
Pasco (H)	2
Pinellas (H)	2
Polk (H)	2
Putnam (H)	3
Santa Rosa (H)	4

County	Zone
Sarasota (H)	2
Seminole (H)	2
St Johns (H)	3
St Lucie (H)	2
Sumter (H)	2
Suwannee (H)	3
Taylor (H)	3
Union (H)	3
Volusia (H)	2
Wakulla (H)	4
Walton (H)	4
Washington (H)	4
GEORGIA	
Appling (H)	4
Atkinson (H)	4
Bacon (H)	4
Baker (H)	4
Baldwin (H)	6
Banks	7
Barrow	7
Bartow	7
Ben Hill (H)	5
Berrien (H)	4
Bibb (H)	5
Bleckley (H)	5
Brantley (H)	4
Brooks (H)	4
Bryan (H)	4
Bulloch (H)	5
Burke (H)	6
Butts	7
Calhoun (H)	5
Camden (H)	4
Candler (H)	5
Carroll	7
Catoosa	8
Charlton (H)	4
Chatham (H)	4
Chattahoochee (H)	5
Chattooga	8
Cherokee	8
Clarke	7
Clay (H)	5
Clayton	7
Clinch (H)	4
Cobb	7
Coffee (H)	5
Colquitt (H)	4
Columbia (H)	6
Cook (H)	4
Coweta	7
Crawford (H)	5
Crisp (H)	5
Dade	8
Dawson	8
De Kalb	7

County	Zone
Decatur (H)	4
Dodge (H)	5
Dooly (H)	5
Dougherty (H)	5
Douglas	7
Early (H)	5
Echols (H)	4
Effingham (H)	4
Elbert	7
Emanuel (H)	5
Evans (H)	4
Fannin	8
Fayette	7
Floyd	7
Forsyth	8
Franklin	7
Fulton	7
Gilmer	8
Glascock (H)	6
Glynn (H)	4
Gordon	8
Grady (H)	4
Greene (H)	6
Gwinnett	7
Habersham	8
Hall	7
Hancock (H)	6
Haralson	7
Harris (H)	6
Hart	7
Heard (H)	6
Henry	7
Houston (H)	5
Irwin (H)	5
Jackson	7
Jasper (H)	6
Jeff Davis (H)	4
Jefferson (H)	6
Jenkins (H)	5
Johnson (H)	5
Jones (H)	6
Lamar (H)	6
Lanier (H)	4
Laurens (H)	5
Lee (H)	5
Liberty (H)	4
Lincoln (H)	6
Long (H)	4
Lowndes (H)	4
Lumpkin	8
Macon (H)	5
Madison	7
Marion (H)	5
Mcduffie (H)	6
Mcintosh (H)	4
Meriwether (H)	6
Miller (H)	4

"Hot and humid" counties exempt from the vapor retarder requirement are marked with an "(H)"

County	Zone	County	Zone	County	Zone	County	Zone	County	Zone
Mitchell (H)	4	Wilkinson (H)	5	Adams	12	Marion	11	Clay	12
Monroe (H)	6	Worth (H)	5	Alexander	10	Marshall	13	Clinton	13
Montgomery (H)	5			Bond	11	Mason	12	Crawford	11
Morgan (H)	6	**HAWAII**		Boone	14	Massac	10	Daviess	11
Murray	8	Hawaii (H)	1	Brown	12	Mcdonough	13	De Kalb	13
Muscogee (H)	5	Honolulu (H)	1	Bureau	13	Mchenry	14	Dearborn	11
Newton	7	Kalawao (H)	1	Calhoun	11	Mclean	12	Decatur	12
Oconee	7	Kauai (H)	1	Carroll	14	Menard	12	Delaware	13
Oglethorpe	7	Maui (H)	1	Cass	12	Mercer	13	Dubois	11
Paulding	7			Champaign	12	Monroe	10	Elkhart	13
Peach (H)	5	**IDAHO**		Christian	11	Montgomery	11	Fayette	12
Pickens	8	Ada	12	Clark	12	Morgan	12	Floyd	10
Pierce (H)	4	Adams	15	Clay	11	Moultrie	12	Fountain	12
Pike (H)	6	Bannock	15	Clinton	10	Ogle	14	Franklin	12
Polk	7	Bear Lake	15	Coles	12	Peoria	13	Fulton	14
Pulaski (H)	5	Benewah	14	Cook	14	Perry	10	Gibson	10
Putnam (H)	6	Bingham	15	Crawford	11	Piatt	12	Grant	13
Quitman (H)	5	Blaine	15	Cumberland	12	Pike	12	Greene	11
Rabun	8	Boise	15	De Kalb	14	Pope	10	Hamilton	12
Randolph (H)	5	Bonner	15	De Witt	12	Pulaski	10	Hancock	12
Richmond (H)	6	Bonneville	15	Douglas	12	Putnam	13	Harrison	10
Rockdale	7	Boundary	15	Du Page	14	Randolph	10	Hendricks	12
Schley (H)	5	Butte	16	Edgar	12	Richland	11	Henry	12
Screven (H)	5	Camas	15	Edwards	11	Rock Island	13	Howard	13
Seminole (H)	4	Canyon	12	Effingham	11	Saline	10	Huntington	14
Spalding	7	Caribou	15	Fayette	11	Sangamon	12	Jackson	11
Stephens	7	Cassia	14	Ford	13	Schuyler	12	Jasper	13
Stewart (H)	5	Clark	15	Franklin	10	Scott	12	Jay	13
Sumter (H)	5	Clearwater	12	Fulton	13	Shelby	11	Jefferson	10
Talbot (H)	5	Custer	16	Gallatin	10	St Clair	10	Jennings	11
Taliaferro (H)	6	Elmore	13	Greene	11	Stark	13	Johnson	12
Tattnall (H)	4	Franklin	15	Grundy	13	Stephenson	14	Knox	11
Taylor (H)	5	Fremont	16	Hamilton	10	Tazewell	12	Kosciusko	14
Telfair (H)	5	Gem	13	Hancock	13	Union	10	La Porte	13
Terrell (H)	5	Gooding	13	Hardin	10	Vermilion	12	Lagrange	14
Thomas (H)	4	Idaho	15	Henderson	13	Wabash	11	Lake	13
Tift (H)	5	Jefferson	16	Henry	13	Warren	13	Lawrence	11
Toombs (H)	4	Jerome	14	Iroquois	13	Washington	10	Madison	13
Towns	8	Kootenai	14	Jackson	10	Wayne	11	Marion	12
Treutlen (H)	5	Latah	14	Jasper	11	White	10	Marshall	13
Troup (H)	6	Lemhi	15	Jefferson	11	Whiteside	14	Martin	11
Turner (H)	5	Lewis	15	Jersey	10	Will	13	Miami	14
Twiggs (H)	5	Lincoln	15	Jo Daviess	14	Williamson	10	Monroe	11
Union	8	Madison	16	Johnson	10	Winnebago	14	Montgomery	12
Upson (H)	5	Minidoka	15	Kane	14	Woodford	13	Morgan	12
Walker	8	Nez Perce	12	Kankakee	13			Newton	13
Walton	7	Oneida	15	Kendall	13	**INDIANA**		Noble	14
Ware (H)	4	Owyhee	12	Knox	13	Adams	13	Ohio	11
Warren (H)	6	Payette	12	La Salle	13	Allen	13	Orange	11
Washington (H)	6	Power	15	Lake	14	Bartholomew	11	Owen	12
Wayne (H)	4	Shoshone	14	Lawrence	11	Benton	13	Parke	12
Webster (H)	5	Teton	16	Lee	14	Blackford	13	Perry	10
Wheeler (H)	5	Twin Falls	14	Livingston	13	Boone	12	Pike	11
White	8	Valley	16	Logan	12	Brown	11	Porter	13
Whitfield	8	Washington	13	Macon	12	Carroll	13	Posey	10
Wilcox (H)	5			Macoupin	11	Cass	13	Pulaski	13
Wilkes	7	**ILLINOIS**		Madison	10	Clark	10	Putnam	12

"Hot and humid" counties exempt from the vapor retarder requirement are marked with an "(H)"

County	Zone	County	Zone	County	Zone	County	Zone	County	Zone
Randolph	13	Dubuque	14	Union	13	Jefferson	11	Washington	12
Ripley	11	Emmet	15	Van Buren	13	Jewell	12	Wichita	12
Rush	12	Fayette	15	Wapello	13	Johnson	11	Wilson	9
Scott	11	Floyd	15	Warren	14	Kearny	11	Woodson	10
Shelby	12	Franklin	15	Washington	13	Kingman	10	Wyandotte	11
Spencer	10	Fremont	13	Wayne	13	Kiowa	10		
St Joseph	13	Greene	14	Webster	15	Labette	9	**KENTUCKY**	
Starke	13	Grundy	15	Winnebago	15	Lane	12	Adair	9
Steuben	14	Guthrie	14	Winneshiek	15	Leavenworth	11	Allen	9
Sullivan	11	Hamilton	15	Woodbury	15	Lincoln	11	Anderson	10
Switzerland	10	Hancock	15	Worth	15	Linn	10	Ballard	9
Tippecanoe	13	Hardin	15	Wright	15	Logan	12	Barren	9
Tipton	13	Harrison	14			Lyon	11	Bath	11
Union	12	Henry	13	**KANSAS**		Marion	11	Bell	10
Vanderburgh	10	Howard	15	Allen	10	Marshall	12	Boone	11
Vermillion	12	Humboldt	15	Anderson	10	Mcpherson	11	Bourbon	10
Vigo	12	Ida	15	Atchison	11	Meade	10	Boyd	11
Wabash	14	Iowa	14	Barber	9	Miami	10	Boyle	10
Warren	12	Jackson	14	Barton	11	Mitchell	12	Bracken	11
Warrick	10	Jasper	14	Bourbon	10	Montgomery	9	Breathitt	10
Washington	11	Jefferson	13	Brown	11	Morris	11	Breckenridge	9
Wayne	12	Johnson	13	Butler	10	Morton	10	Bullitt	10
Wells	13	Jones	14	Chase	10	Nemaha	11	Butler	9
White	13	Keokuk	13	Chautauqua	9	Neosho	9	Caldwell	9
Whitley	14	Kossuth	15	Cherokee	9	Ness	12	Calloway	9
		Lee	13	Cheyenne	13	Norton	13	Campbell	11
IOWA		Linn	14	Clark	10	Osage	10	Carlisle	9
Adair	14	Louisa	13	Clay	11	Osborne	12	Carroll	10
Adams	13	Lucas	13	Cloud	12	Ottawa	11	Carter	11
Allamakee	15	Lyon	15	Coffey	10	Pawnee	11	Casey	10
Appanoose	13	Madison	14	Comanche	9	Phillips	12	Christian	9
Audubon	14	Mahaska	13	Cowley	9	Pottawatomie	11	Clark	10
Benton	14	Marion	13	Crawford	9	Pratt	10	Clay	10
Black Hawk	15	Marshall	14	Decatur	13	Rawlins	13	Clinton	10
Boone	14	Mills	13	Dickinson	11	Reno	11	Crittenden	9
Bremer	15	Mitchell	15	Doniphan	11	Republic	12	Cumberland	9
Buchanan	15	Monona	14	Douglas	10	Rice	11	Daviess	9
Buena Vista	15	Monroe	13	Edwards	11	Riley	11	Edmonson	9
Butler	15	Montgomery	13	Elk	9	Rooks	12	Elliot	11
Calhoun	15	Muscatine	13	Ellis	12	Rush	11	Estill	10
Carroll	14	Obrien	15	Ellsworth	11	Russell	11	Fayette	10
Cass	14	Osceola	15	Finney	11	Saline	11	Fleming	11
Cedar	14	Page	13	Ford	11	Scott	12	Floyd	10
Cerro Gordo	15	Palo Alto	15	Franklin	10	Sedgwick	10	Franklin	10
Cherokee	15	Plymouth	15	Geary	11	Seward	10	Fulton	9
Chickasaw	15	Pocahontas	15	Gove	12	Shawnee	11	Gallatin	11
Clarke	13	Polk	14	Graham	12	Sheridan	12	Garrard	10
Clay	15	Pottawattamie	14	Grant	11	Sherman	13	Grant	11
Clayton	15	Poweshiek	14	Gray	11	Smith	12	Graves	9
Clinton	13	Ringgold	13	Greeley	12	Stafford	11	Grayson	9
Crawford	14	Sac	15	Greenwood	10	Stanton	11	Green	9
Dallas	14	Scott	13	Hamilton	11	Stevens	10	Greenup	11
Davis	13	Shelby	14	Harper	9	Sumner	9	Hancock	9
Decatur	13	Sioux	15	Harvey	11	Thomas	13	Hardin	9
Delaware	15	Story	14	Haskell	11	Trego	12	Harlan	10
Des Moines	13	Tama	14	Hodgeman	11	Wabaunsee	11	Harrison	11
Dickinson	15	Taylor	13	Jackson	11	Wallace	12	Hart	9

"Hot and humid" counties exempt from the vapor retarder requirement are marked with an "(H)"

County	Zone
Henderson	9
Henry	10
Hickman	9
Hopkins	9
Jackson	10
Jefferson	10
Jessamine	10
Johnson	11
Kenton	11
Knott	10
Knox	10
Larue	9
Laurel	10
Lawrence	11
Lee	10
Leslie	10
Letcher	10
Lewis	11
Lincoln	10
Livingston	9
Logan	9
Lyon	9
Madison	10
Magoffin	10
Marion	10
Marshall	9
Martin	11
Mason	11
Mccracken	9
Mccreary	10
Mclean	9
Meade	9
Menifee	10
Mercer	10
Metcalfe	9
Monroe	9
Montgomery	10
Morgan	10
Muhlenberg	9
Nelson	10
Nicholas	11
Ohio	9
Oldham	10
Owen	10
Owsley	10
Pendleton	11
Perry	10
Pike	10
Powell	10
Pulaski	10
Robertson	11
Rockcastle	10
Rowan	11
Russell	10
Scott	11
Shelby	10
Simpson	9
Spencer	10
Taylor	9
Todd	9
Trigg	9
Trimble	10
Union	9
Warren	9
Washington	10
Wayne	10
Webster	9
Whitley	10
Wolfe	10
Woodford	10
LOUISIANA	
Acadia (H)	4
Allen (H)	4
Ascension (H)	4
Assumption (H)	3
Avoyelles (H)	5
Beauregard (H)	4
Bienville (H)	6
Bossier (H)	6
Caddo (H)	6
Calcasieu (H)	4
Caldwell (H)	6
Cameron (H)	4
Catahoula (H)	5
Claiborne (H)	6
Concordia (H)	5
De Soto (H)	5
East Baton Rouge (H)	4
East Carroll (H)	6
East Feliciana (H)	4
Evangeline (H)	4
Franklin (H)	6
Grant (H)	5
Iberia (H)	4
Iberville (H)	4
Jackson (H)	6
Jefferson (H)	3
Jefferson Davis (H)	4
La Salle (H)	5
Lafayette (H)	4
Lafourche (H)	3
Lincoln (H)	6
Livingston (H)	4
Madison (H)	6
Morehouse (H)	6
Natchitoches (H)	5
Orleans (H)	3
Ouachita (H)	6
Plaquemines (H)	3
Pointe Coupee (H)	4
Rapides (H)	5
Red River (H)	5
Richland (H)	6
Sabine (H)	5
St Bernard (H)	3
St Charles (H)	3
St Helena (H)	4
St James (H)	3
St John The Baptist (H)	3
St Landry (H)	4
St Martin (H)	4
St Mary (H)	3
St Tammany (H)	4
Tangipahoa (H)	4
Tensas (H)	5
Terrebonne (H)	3
Union (H)	6
Vermilion (H)	4
Vernon (H)	5
Washington (H)	4
Webster (H)	6
West Baton Rouge (H)	4
West Carroll (H)	6
West Feliciana (H)	4
Winn (H)	5
MAINE	
Androscoggin	15
Aroostook	17
Cumberland	15
Franklin	16
Hancock	15
Kennebec	15
Knox	15
Lincoln	15
Oxford	16
Penobscot	15
Piscataquis	17
Sagadahoc	15
Somerset	17
Waldo	15
Washington	15
York	15
MARYLAND	
Allegany	12
Anne Arundel	9
Baltimore	10
Baltimore City	9
Calvert	9
Caroline	9
Carroll	11
Cecil	10
Charles	9
Dorchester	9
Frederick	11
Garrett	13
Harford	10
Howard	10
Kent	10
Montgomery	10
Prince Georges	10
Queen Annes	9
Somerset	9
St Marys	9
Talbot	9
Washington	11
Wicomico	9
Worcester	9
MASSACHUSETTS	
Barnstable	12
Berkshire	14
Bristol	12
Dukes	12
Essex	13
Franklin	14
Hampden	14
Hampshire	14
Middlesex	13
Nantucket	12
Norfolk	13
Plymouth	12
Suffolk	13
Worcester	14
MICHIGAN	
Alcona	15
Alger	16
Allegan	14
Alpena	15
Antrim	15
Arenac	15
Baraga	17
Barry	14
Bay	15
Benzie	15
Berrien	14
Branch	14
Calhoun	14
Cass	14
Charlevoix	15
Cheboygan	15
Chippewa	16
Clare	15
Clinton	14
Crawford	15
Delta	16
Dickinson	16
Eaton	14
Emmet	15
Genesee	14
Gladwin	15
Gogebic	17
Grand Traverse	15
Gratiot	14
Hillsdale	14
Houghton	17
Huron	14
Ingham	14
Ionia	14
Iosco	15
Iron	17
Isabella	15
Jackson	14
Kalamazoo	14
Kalkaska	15
Kent	14
Keweenaw	17
Lake	15
Lapeer	14
Leelanau	15
Lenawee	14
Livingston	14
Luce	16
Mackinac	16
Macomb	14
Manistee	15
Marquette	16
Mason	15
Mecosta	15
Menominee	16
Midland	15
Missaukee	15
Monroe	13
Montcalm	14
Montmorency	15
Muskegon	14
Newaygo	15
Oakland	14
Oceana	15
Ogemaw	15
Ontonagon	17
Osceola	15
Oscoda	15
Otsego	15
Ottawa	14
Presque Isle	15
Roscommon	15
Saginaw	14
Sanilac	14
Schoolcraft	16
Shiawassee	14
St Clair	14
St Joseph	14
Tuscola	14
Van Buren	14
Washtenaw	13
Wayne	13
Wexford	15
MINNESOTA	
Aitkin	17
Anoka	16

"Hot and humid" counties exempt from the vapor retarder requirement are marked with an "(H)"

County	Zone	County	Zone	County	Zone	County	Zone	County	Zone
Becker	17	Polk	17	Issaquena (H)	6	Adair	12	Linn	12
Beltrami	17	Pope	16	Itawamba	7	Andrew	12	Livingston	12
Benton	16	Ramsey	15	Jackson (H)	4	Atchison	13	Macon	12
Big Stone	16	Red Lake	17	Jasper (H)	5	Audrain	12	Madison	10
Blue Earth	15	Redwood	15	Jefferson (H)	5	Barry	9	Maries	11
Brown	15	Renville	15	Jefferson Davis (H)	5	Barton	10	Marion	12
Carlton	17	Rice	15	Jones (H)	5	Bates	11	Mcdonald	9
Carver	15	Rock	15	Kemper (H)	6	Benton	11	Mercer	13
Cass	17	Roseau	17	Lafayette	7	Bollinger	10	Miller	11
Chippewa	16	Scott	15	Lamar (H)	4	Boone	11	Mississippi	9
Chisago	16	Sherburne	16	Lauderdale (H)	6	Buchanan	12	Moniteau	11
Clay	17	Sibley	15	Lawrence (H)	5	Butler	9	Monroe	12
Clearwater	17	St Louis	17	Leake (H)	6	Caldwell	12	Montgomery	11
Cook	17	Stearns	16	Lee	7	Callaway	11	Morgan	11
Cottonwood	15	Steele	15	Leflore (H)	6	Camden	11	New Madrid	9
Crow Wing	17	Stevens	16	Lincoln (H)	5	Cape Girardeau	9	Newton	9
Dakota	15	Swift	16	Lowndes (H)	6	Carroll	12	Nodaway	13
Dodge	15	Todd	16	Madison (H)	6	Carter	10	Oregon	9
Douglas	16	Traverse	16	Marion (H)	4	Cass	11	Osage	11
Faribault	15	Wabasha	15	Marshall	7	Cedar	11	Ozark	9
Fillmore	15	Wadena	17	Monroe (H)	6	Chariton	12	Pemiscot	9
Freeborn	15	Waseca	15	Montgomery (H)	6	Christian	10	Perry	10
Goodhue	15	Washington	15	Neshoba (H)	6	Clark	13	Pettis	11
Grant	16	Watonwan	15	Newton (H)	6	Clay	11	Phelps	10
Hennepin	15	Wilkin	17	Noxubee (H)	6	Clinton	12	Pike	12
Houston	15	Winona	15	Oktibbeha (H)	6	Cole	11	Platte	11
Hubbard	17	Wright	16	Panola	7	Cooper	11	Polk	10
Isanti	16	Yellow Medicine	15	Pearl River (H)	4	Crawford	10	Pulaski	10
Itasca	17			Perry (H)	5	Dade	10	Putnam	13
Jackson	15	**MISSISSIPPI**		Pike (H)	4	Dallas	10	Ralls	12
Kanabec	16	Adams (H)	5	Pontotoc	7	Daviess	12	Randolph	12
Kandiyohi	16	Alcorn	7	Prentiss	7	De Kalb	12	Ray	11
Kittson	17	Amite (H)	4	Quitman	7	Dent	10	Reynolds	10
Koochiching	17	Attala (H)	6	Rankin (H)	6	Douglas	10	Ripley	9
Lac Qui Parle	15	Benton	7	Scott (H)	6	Dunklin	9	Saline	11
Lake	17	Bolivar (H)	6	Sharkey (H)	6	Franklin	10	Schuyler	13
Lake Of The Woods	17	Calhoun (H)	6	Simpson (H)	5	Gasconade	11	Scotland	13
Le Sueur	15	Carroll (H)	6	Smith (H)	5	Gentry	13	Scott	9
Lincoln	15	Chickasaw (H)	6	Stone (H)	4	Greene	10	Shannon	10
Lyon	15	Choctaw (H)	6	Sunflower (H)	6	Grundy	12	Shelby	12
Mahnomen	17	Claiborne (H)	5	Tallahatchie	7	Harrison	13	St Charles	10
Marshall	17	Clarke (H)	5	Tate	7	Henry	11	St Clair	11
Martin	15	Clay (H)	6	Tippah	7	Hickory	11	St Francois	10
Mcleod	15	Coahoma	7	Tishomingo	7	Holt	12	St Louis	10
Meeker	16	Copiah (H)	5	Tunica	7	Howard	11	St Louis City	10
Mille Lacs	16	Covington (H)	5	Union	7	Howell	9	Ste Genevieve	10
Morrison	16	De Soto	7	Walthall (H)	4	Iron	10	Stoddard	9
Mower	15	Forrest (H)	5	Warren (H)	6	Jackson	11	Stone	9
Murray	15	Franklin (H)	5	Washington (H)	6	Jasper	9	Sullivan	12
Nicollet	15	George (H)	4	Wayne (H)	5	Jefferson	10	Taney	9
Nobles	15	Greene (H)	5	Webster (H)	6	Johnson	11	Texas	10
Norman	17	Grenada (H)	6	Wilkinson (H)	4	Knox	12	Vernon	11
Olmsted	15	Hancock (H)	4	Winston (H)	6	Laclede	10	Warren	11
Otter Tail	17	Harrison (H)	4	Yalobusha	7	Lafayette	11	Washington	10
Pennington	17	Hinds (H)	6	Yazoo (H)	6	Lawrence	10	Wayne	10
Pine	16	Holmes (H)	6			Lewis	12	Webster	10
Pipestone	15	Humphreys (H)	6	**MISSOURI**		Lincoln	11	Worth	13

"Hot and humid" counties exempt from the vapor retarder requirement are marked with an "(H)"

County	Zone
Wright	10
MONTANA	
Beaverhead	15
Big Horn	15
Blaine	16
Broadwater	15
Carbon	15
Carter	15
Cascade	15
Chouteau	15
Custer	15
Daniels	16
Dawson	15
Deer Lodge	16
Fallon	15
Fergus	15
Flathead	16
Gallatin	15
Garfield	15
Glacier	16
Golden Valley	15
Granite	16
Hill	16
Jefferson	15
Judith Basin	15
Lake	15
Lewis And Clark	15
Liberty	16
Lincoln	15
Madison	15
Mccone	15
Meagher	15
Mineral	15
Missoula	15
Musselshell	15
Park	15
Petroleum	15
Phillips	16
Pondera	16
Powder River	15
Powell	16
Prairie	15
Ravalli	15
Richland	15
Roosevelt	16
Rosebud	15
Sanders	15
Sheridan	16
Silver Bow	16
Stillwater	15
Sweet Grass	15
Teton	15
Toole	16
Treasure	15
Valley	16
Wheatland	15

County	Zone
Wibaux	15
Yellowstone	15
Yellowstone National Park	15
NEBRASKA	
Adams	13
Antelope	14
Arthur	14
Banner	14
Blaine	14
Boone	14
Box Butte	15
Boyd	14
Brown	14
Buffalo	13
Burt	14
Butler	13
Cass	13
Cedar	14
Chase	13
Cherry	14
Cheyenne	14
Clay	13
Colfax	13
Cuming	14
Custer	14
Dakota	14
Dawes	15
Dawson	13
Deuel	14
Dixon	14
Dodge	13
Douglas	13
Dundy	13
Fillmore	13
Franklin	13
Frontier	13
Furnas	13
Gage	13
Garden	14
Garfield	14
Gosper	13
Grant	14
Greeley	14
Hall	13
Hamilton	13
Harlan	13
Hayes	13
Hitchcock	13
Holt	14
Hooker	14
Howard	14
Jefferson	13
Johnson	13
Kearney	13
Keith	14

County	Zone
Keya Paha	14
Kimball	14
Knox	14
Lancaster	13
Lincoln	14
Logan	14
Loup	14
Madison	14
Mcpherson	14
Merrick	13
Morrill	14
Nance	13
Nemaha	13
Nuckolls	13
Otoe	13
Pawnee	13
Perkins	13
Phelps	13
Pierce	14
Platte	13
Polk	13
Red Willow	13
Richardson	13
Rock	14
Saline	13
Sarpy	13
Saunders	13
Scotts Bluff	14
Seward	13
Sheridan	15
Sherman	14
Sioux	15
Stanton	14
Thayer	13
Thomas	14
Thurston	14
Valley	14
Washington	13
Wayne	14
Webster	13
Wheeler	14
York	13
NEVADA	
Carson City	12
Churchill	12
Clark	5
Douglas	13
Elko	15
Esmeralda	12
Eureka	15
Humboldt	13
Lander	13
Lincoln	12
Lyon	13
Mineral	12
Nye	12

County	Zone
Pershing	12
Storey	12
Washoe	12
White Pine	15
NEW HAMPSHIRE	
Belknap	15
Carroll	15
Cheshire	15
Coos	16
Grafton	15
Hillsborough	15
Merrimack	15
Rockingham	15
Strafford	15
Sullivan	15
NEW JERSEY	
Atlantic	10
Bergen	12
Burlington	11
Camden	10
Cape May	10
Cumberland	10
Essex	11
Gloucester	10
Hudson	11
Hunterdon	12
Mercer	11
Middlesex	11
Monmouth	11
Morris	12
Ocean	11
Passaic	12
Salem	10
Somerset	12
Sussex	13
Union	11
Warren	12
NEW MEXICO	
Bernalillo	9
Catron	11
Chaves	7
Cibola	12
Colfax	13
Curry	9
De Baca	9
Dona Ana	7
Eddy	7
Grant	9
Guadalupe	9
Harding	11
Hidalgo	7
Lea	7
Lincoln	9
Los Alamos	13

County	Zone
Luna	7
Mckinley	13
Mora	15
Otero	7
Quay	8
Rio Arriba	12
Roosevelt	8
San Juan	12
San Miguel	12
Sandoval	13
Santa Fe	13
Sierra	8
Socorro	9
Taos	15
Torrance	11
Union	11
Valencia	10
NEW YORK	
Albany	14
Allegany	15
Bronx	11
Broome	15
Cattaraugus	15
Cayuga	14
Chautauqua	13
Chemung	15
Chenango	15
Clinton	15
Columbia	13
Cortland	15
Delaware	15
Dutchess	13
Erie	14
Essex	16
Franklin	16
Fulton	15
Genesee	14
Greene	14
Hamilton	16
Herkimer	15
Jefferson	15
Kings	10
Lewis	15
Livingston	14
Madison	14
Monroe	14
Montgomery	14
Nassau	11
New York	10
Niagara	14
Oneida	15
Onondaga	14
Ontario	14
Orange	12
Orleans	14
Oswego	14

"Hot and humid" counties exempt from the vapor retarder requirement are marked with an "(H)"

County	Zone
Otsego	15
Putnam	12
Queens	10
Rensselaer	14
Richmond	11
Rockland	12
Saratoga	14
Schenectady	14
Schoharie	15
Schuyler	15
Seneca	14
St Lawrence	15
Steuben	15
Suffolk	11
Sullivan	15
Tioga	15
Tompkins	15
Ulster	15
Warren	15
Washington	15
Wayne	14
Westchester	12
Wyoming	14
Yates	14
NORTH CAROLINA	
Alamance	8
Alexander	8
Alleghany	11
Anson	7
Ashe	11
Avery	11
Beaufort (H)	6
Bertie	7
Bladen (H)	6
Brunswick (H)	6
Buncombe	9
Burke	8
Cabarrus	7
Caldwell	8
Camden	7
Carteret (H)	6
Caswell	8
Catawba	8
Chatham	8
Cherokee	9
Chowan	7
Clay	9
Cleveland	7
Columbus (H)	6
Craven (H)	6
Cumberland	7
Currituck	7
Dare (H)	6
Davidson	8
Davie	8
Duplin (H)	6

County	Zone
Durham	8
Edgecombe	7
Forsyth	8
Franklin	8
Gaston	7
Gates	7
Graham	9
Granville	8
Greene	7
Guilford	8
Halifax	7
Harnett	7
Haywood	9
Henderson	9
Hertford	7
Hoke	7
Hyde (H)	6
Iredell	8
Jackson	9
Johnston	7
Jones (H)	6
Lee	7
Lenoir	7
Lincoln	7
Macon	9
Madison	9
Martin	7
Mcdowell	8
Mecklenburg	7
Mitchell	11
Montgomery	7
Moore	7
Nash	7
New Hanover (H)	6
Northampton	7
Onslow (H)	6
Orange	8
Pamlico (H)	6
Pasquotank	7
Pender (H)	6
Perquimans	7
Person	8
Pitt	7
Polk	7
Randolph	8
Richmond	7
Robeson	7
Rockingham	8
Rowan	7
Rutherford	7
Sampson (H)	6
Scotland	7
Stanly	7
Stokes	9
Surry	9
Swain	9
Transylvania	9

County	Zone
Tyrrell (H)	6
Union	7
Vance	8
Wake	7
Warren	8
Washington	7
Watauga	11
Wayne	7
Wilkes	9
Wilson	7
Yadkin	8
Yancey	11
NORTH DAKOTA	
Adams	16
Barnes	17
Benson	17
Billings	16
Bottineau	17
Bowman	16
Burke	17
Burleigh	16
Cass	17
Cavalier	17
Dickey	16
Divide	17
Dunn	16
Eddy	17
Emmons	16
Foster	17
Golden Valley	16
Grand Forks	17
Grant	16
Griggs	17
Hettinger	16
Kidder	17
La Moure	16
Logan	16
Mchenry	17
Mcintosh	16
Mckenzie	16
Mclean	17
Mercer	16
Morton	16
Mountrail	17
Nelson	17
Oliver	16
Pembina	17
Pierce	17
Ramsey	17
Ransom	16
Renville	17
Richland	16
Rolette	17
Sargent	16
Sheridan	17
Sioux	16

County	Zone
Slope	16
Stark	16
Steele	17
Stutsman	17
Towner	17
Traill	17
Walsh	17
Ward	17
Wells	17
Williams	17
OHIO	
Adams	11
Allen	13
Ashland	13
Ashtabula	13
Athens	11
Auglaize	13
Belmont	12
Brown	11
Butler	12
Carroll	13
Champaign	13
Clark	13
Clermont	11
Clinton	12
Columbiana	13
Coshocton	12
Crawford	13
Cuyahoga	13
Darke	13
Defiance	14
Delaware	13
Erie	13
Fairfield	12
Fayette	12
Franklin	12
Fulton	14
Gallia	11
Geauga	13
Greene	12
Guernsey	12
Hamilton	11
Hancock	13
Hardin	13
Harrison	13
Henry	14
Highland	11
Hocking	12
Holmes	13
Huron	13
Jackson	11
Jefferson	13
Knox	13
Lake	13
Lawrence	11
Licking	12

County	Zone
Logan	13
Lorain	13
Lucas	14
Madison	12
Mahoning	13
Marion	13
Medina	13
Meigs	11
Mercer	13
Miami	13
Monroe	12
Montgomery	12
Morgan	12
Morrow	13
Muskingum	12
Noble	12
Ottawa	13
Paulding	14
Perry	12
Pickaway	12
Pike	11
Portage	13
Preble	12
Putnam	13
Richland	13
Ross	12
Sandusky	13
Scioto	11
Seneca	13
Shelby	13
Stark	13
Summit	13
Trumbull	13
Tuscarawas	13
Union	13
Van Wert	13
Vinton	11
Warren	12
Washington	11
Wayne	13
Williams	14
Wood	14
Wyandot	13
OKLAHOMA	
Adair	8
Alfalfa	9
Atoka	7
Beaver	10
Beckham	8
Blaine	8
Bryan	7
Caddo	8
Canadian	8
Carter (H)	6
Cherokee	8
Choctaw (H)	6

"Hot and humid" counties exempt from the vapor retarder requirement are marked with an "(H)"

County	Zone
Cimarron	10
Cleveland	7
Coal	7
Comanche	7
Cotton	7
Craig	9
Creek	8
Custer	8
Delaware	8
Dewey	9
Ellis	9
Garfield	8
Garvin	7
Grady	7
Grant	9
Greer	7
Harmon	7
Harper	9
Haskell	7
Hughes	7
Jackson	7
Jefferson (H)	6
Johnston (H)	6
Kay	9
Kingfisher	8
Kiowa	7
Latimer	7
Le Flore	7
Lincoln	7
Logan	8
Love (H)	6
Major	9
Marshall (H)	6
Mayes	8
Mcclain	7
Mccurtain	7
Mcintosh	7
Murray	7
Muskogee	7
Noble	8
Nowata	9
Okfuskee	7
Oklahoma	8
Okmulgee	8
Osage	8
Ottawa	9
Pawnee	8
Payne	8
Pittsburg	7
Pontotoc	7
Pottawatomie	7
Pushmataha (H)	6
Roger Mills	9
Rogers	9
Seminole	7
Sequoyah	7
Stephens	7

County	Zone
Texas	10
Tillman	7
Tulsa	8
Wagoner	8
Washington	9
Washita	8
Woods	9
Woodward	9
OREGON	
Baker	15
Benton	10
Clackamas	10
Clatsop	11
Columbia	11
Coos	9
Crook	14
Curry	9
Deschutes	14
Douglas	9
Gilliam	12
Grant	15
Harney	15
Hood River	12
Jackson	11
Jefferson	13
Josephine	9
Klamath	14
Lake	15
Lane	10
Lincoln	11
Linn	10
Malheur	12
Marion	10
Morrow	12
Multnomah	10
Polk	10
Sherman	13
Tillamook	11
Umatilla	12
Union	13
Wallowa	15
Wasco	13
Washington	10
Wheeler	13
Yamhill	10
PENNSYLVANIA	
Adams	11
Allegheny	12
Armstrong	13
Beaver	12
Bedford	13
Berks	12
Blair	13
Bradford	15
Bucks	11

County	Zone
Butler	14
Cambria	13
Cameron	15
Carbon	13
Centre	13
Chester	11
Clarion	14
Clearfield	15
Clinton	13
Columbia	13
Crawford	14
Cumberland	12
Dauphin	12
Delaware	10
Elk	15
Erie	14
Fayette	12
Forest	15
Franklin	11
Fulton	12
Greene	12
Huntingdon	12
Indiana	13
Jefferson	15
Juniata	12
Lackawanna	14
Lancaster	11
Lawrence	14
Lebanon	12
Lehigh	12
Luzerne	13
Lycoming	13
Mckean	15
Mercer	14
Mifflin	12
Monroe	13
Montgomery	11
Montour	13
Northampton	12
Northumberland	13
Perry	12
Philadelphia	10
Pike	13
Potter	15
Schuylkill	13
Snyder	13
Somerset	13
Sullivan	14
Susquehanna	15
Tioga	15
Union	13
Venango	14
Warren	14
Washington	12
Wayne	15
Westmoreland	13
Wyoming	14

County	Zone
York	11
RHODE ISLAND	
Bristol	12
Kent	12
Newport	12
Providence	14
Washington	12
SOUTH CAROLINA	
Abbeville	7
Aiken (H)	6
Allendale (H)	5
Anderson	7
Bamberg (H)	5
Barnwell (H)	5
Beaufort (H)	5
Berkeley (H)	5
Calhoun (H)	6
Charleston (H)	5
Cherokee	7
Chester	7
Chesterfield	7
Clarendon (H)	6
Colleton (H)	5
Darlington (H)	6
Dillon (H)	6
Dorchester (H)	5
Edgefield (H)	6
Fairfield	7
Florence (H)	6
Georgetown (H)	5
Greenville	7
Greenwood	7
Hampton (H)	5
Horry (H)	5
Jasper (H)	5
Kershaw	7
Lancaster	7
Laurens	7
Lee (H)	6
Lexington (H)	6
Marion (H)	6
Marlboro (H)	6
Mccormick (H)	6
Newberry (H)	6
Oconee	7
Orangeburg (H)	6
Pickens	7
Richland (H)	6
Saluda (H)	6
Spartanburg	7
Sumter (H)	6
Union	7
Williamsburg (H)	6
York	7

County	Zone
SOUTH DAKOTA	
Aurora	15
Beadle	15
Bennett	14
Bon Homme	14
Brookings	16
Brown	16
Brule	15
Buffalo	15
Butte	15
Campbell	15
Charles Mix	14
Clark	16
Clay	14
Codington	16
Corson	15
Custer	15
Davison	15
Day	16
Deuel	16
Dewey	15
Douglas	14
Edmunds	15
Fall River	15
Faulk	15
Grant	16
Gregory	14
Haakon	15
Hamlin	16
Hand	15
Hanson	15
Harding	15
Hughes	15
Hutchinson	14
Hyde	15
Jackson	14
Jerauld	15
Jones	15
Kingsbury	15
Lake	15
Lawrence	15
Lincoln	15
Lyman	15
Marshall	16
Mccook	15
Mcpherson	16
Meade	15
Mellette	14
Miner	15
Minnehaha	15
Moody	15
Pennington	15
Perkins	15
Potter	15
Roberts	16
Sanborn	15
Shannon	15

"Hot and humid" counties exempt from the vapor retarder requirement are marked with an "(H)"

County	Zone	County	Zone	County	Zone	County	Zone	County	Zone
Spink	15	Johnson	10	Armstrong	9	Dickens	7	Jackson (H)	3
Stanley	15	Knox	8	Atascosa (H)	3	Dimmit (H)	3	Jasper (H)	4
Sully	15	Lake	9	Austin (H)	4	Donley	8	Jeff Davis	6
Todd	14	Lauderdale	8	Bailey	9	Duval (H)	3	Jefferson (H)	4
Tripp	14	Lawrence	8	Bandera (H)	4	Eastland	6	Jim Hogg (H)	3
Turner	15	Lewis	8	Bastrop (H)	4	Ector	6	Jim Wells (H)	3
Union	14	Lincoln	8	Baylor	7	Edwards (H)	4	Johnson (H)	5
Walworth	15	Loudon	8	Bee (H)	3	El Paso	6	Jones	6
Yankton	14	Macon	9	Bell (H)	5	Ellis (H)	5	Karnes (H)	3
Ziebach	15	Madison	8	Bexar (H)	4	Erath	5	Kaufman	5
		Marion	8	Blanco (H)	5	Falls (H)	5	Kendall (H)	5
TENNESSEE		Marshall	8	Borden	7	Fannin	6	Kenedy (H)	2
Anderson	9	Maury	9	Bosque (H)	5	Fayette (H)	4	Kent	7
Bedford	8	Mcminn	8	Bowie	6	Fisher	6	Kerr (H)	5
Benton	9	Mcnairy	8	Brazoria (H)	3	Floyd	8	Kimble (H)	5
Bledsoe	8	Meigs	8	Brazos (H)	4	Foard	7	King	7
Blount	8	Monroe	8	Brewster (H)	5	Fort Bend (H)	4	Kinney (H)	4
Bradley	8	Montgomery	9	Briscoe	8	Franklin	6	Kleberg (H)	2
Campbell	10	Moore	8	Brooks (H)	3	Freestone (H)	5	Knox	7
Cannon	9	Morgan	10	Brown (H)	5	Frio (H)	3	La Salle (H)	3
Carroll	9	Obion	9	Burleson (H)	4	Gaines	7	Lamar	6
Carter	10	Overton	9	Burnet (H)	5	Galveston (H)	3	Lamb	8
Cheatham	9	Perry	8	Caldwell (H)	4	Garza	7	Lampasas (H)	5
Chester	8	Pickett	10	Calhoun (H)	3	Gillespie (H)	5	Lavaca (H)	4
Claiborne	10	Polk	8	Callahan	6	Glasscock	6	Lee (H)	4
Clay	9	Putnam	9	Cameron (H)	2	Goliad (H)	3	Leon (H)	5
Cocke	9	Rhea	8	Camp	6	Gonzales (H)	4	Liberty (H)	4
Coffee	8	Roane	9	Carson	9	Gray	9	Limestone (H)	5
Crockett	8	Robertson	9	Cass	6	Grayson	6	Lipscomb	9
Cumberland	9	Rutherford	8	Castro	9	Gregg	6	Live Oak (H)	3
Davidson	8	Scott	10	Chambers (H)	4	Grimes (H)	4	Llano (H)	5
De Kalb	9	Sequatchie	8	Cherokee (H)	5	Guadalupe (H)	4	Loving	6
Decatur	8	Sevier	9	Childress	7	Hale	8	Lubbock	7
Dickson	9	Shelby (H)	7	Clay	6	Hall	8	Lynn	7
Dyer	8	Smith	9	Cochran	8	Hamilton (H)	5	Madison (H)	4
Fayette (H)	7	Stewart	9	Coke	6	Hansford	9	Marion	6
Fentress	10	Sullivan	9	Coleman (H)	5	Hardeman	7	Martin	6
Franklin	8	Sumner	9	Collin	5	Hardin (H)	4	Mason (H)	5
Gibson	9	Tipton	8	Collingsworth	7	Harris (H)	4	Matagorda (H)	3
Giles	8	Trousdale	9	Colorado (H)	4	Harrison	6	Maverick (H)	3
Grainger	9	Unicoi	10	Comal (H)	4	Hartley	9	Mcculloch (H)	5
Greene	9	Union	9	Comanche (H)	5	Haskell	6	Mclennan (H)	5
Grundy	9	Van Buren	9	Concho (H)	5	Hays (H)	4	Mcmullen (H)	3
Hamblen	9	Warren	9	Cooke	6	Hemphill	8	Medina (H)	4
Hamilton	8	Washington	9	Coryell (H)	5	Henderson (H)	5	Menard (H)	5
Hancock	10	Wayne	8	Cottle	7	Hidalgo (H)	2	Midland	6
Hardeman	8	Weakley	9	Crane (H)	5	Hill (H)	5	Milam (H)	4
Hardin	8	White	9	Crockett (H)	5	Hockley	8	Mills (H)	5
Hawkins	9	Williamson	8	Crosby	7	Hood (H)	5	Mitchell	6
Haywood	8	Wilson	9	Culberson	6	Hopkins	6	Montague	6
Henderson	8			Dallam	9	Houston (H)	5	Montgomery (H)	4
Henry	9	**TEXAS**		Dallas (H)	5	Howard	6	Moore	9
Hickman	9	Anderson (H)	5	Dawson	7	Hudspeth	6	Morris	6
Houston	9	Andrews	6	De Witt (H)	3	Hunt	6	Motley	7
Humphreys	9	Angelina (H)	4	Deaf Smith	9	Hutchinson	9	Nacogdoches (H)	5
Jackson	9	Aransas (H)	3	Delta	6	Irion (H)	5	Navarro (H)	5
Jefferson	9	Archer	6	Denton	5	Jack	6	Newton (H)	4

"Hot and humid" counties exempt from the vapor retarder requirement are marked with an "(H)"

County	Zone
Nolan	6
Nueces (H)	3
Ochiltree	9
Oldham	9
Orange (H)	4
Palo Pinto	6
Panola (H)	5
Parker	5
Parmer	9
Pecos (H)	5
Polk (H)	4
Potter	9
Presidio (H)	5
Rains	6
Randall	9
Reagan (H)	5
Real (H)	4
Red River	6
Reeves	6
Refugio (H)	3
Roberts	9
Robertson (H)	4
Rockwall	5
Runnels (H)	5
Rusk (H)	5
Sabine (H)	5
San Augustine (H)	5
San Jacinto (H)	4
San Patricio (H)	3
San Saba (H)	5
Schleicher (H)	5
Scurry	7
Shackelford	6
Shelby (H)	5
Sherman	9
Smith (H)	5
Somervell (H)	5
Starr (H)	2
Stephens	6
Sterling	6
Stonewall	7
Sutton (H)	5
Swisher	9
Tarrant (H)	5
Taylor	6
Terrell (H)	5
Terry	7
Throckmorton	6
Titus	6
Tom Green (H)	5
Travis (H)	4
Trinity (H)	4
Tyler (H)	4
Upshur	6
Upton (H)	5
Uvalde (H)	4
Val Verde (H)	4
Van Zandt	5
Victoria (H)	3
Walker (H)	4
Waller (H)	4
Ward	6
Washington (H)	4
Webb (H)	3
Wharton (H)	3
Wheeler	8
Wichita	7
Wilbarger	7
Willacy (H)	2
Williamson (H)	4
Wilson (H)	4
Winkler	6
Wise	5
Wood	6
Yoakum	8
Young	6
Zapata (H)	2
Zavala (H)	3
UTAH	
Beaver	14
Box Elder	12
Cache	15
Carbon	14
Daggett	15
Davis	12
Duchesne	15
Emery	14
Garfield	14
Grand	10
Iron	12
Juab	12
Kane	10
Millard	13
Morgan	15
Piute	13
Rich	15
Salt Lake	12
San Juan	13
Sanpete	14
Sevier	13
Summit	15
Tooele	12
Uintah	15
Utah	12
Wasatch	15
Washington	10
Wayne	14
Weber	12
VERMONT	
Addison	15
Bennington	15
Caledonia	16
Chittenden	15
Essex	16
Franklin	15
Grand Isle	15
Lamoille	16
Orange	16
Orleans	16
Rutland	15
Washington	16
Windham	15
Windsor	15
VIRGINIA	
Accomack	8
Albemarle	9
Alleghany	10
Amelia	9
Amherst	9
Appomattox	9
Arlington	10
Augusta	11
Bath	11
Bedford	9
Bland	11
Botetourt	9
Brunswick	8
Buchanan	10
Buckingham	9
Campbell	9
Caroline	9
Carroll	11
Charles City	8
Charlotte	9
Chesterfield	9
Clarke	11
Craig	10
Culpeper	10
Cumberland	9
Dickenson	10
Dinwiddie	8
Essex	9
Fairfax	10
Fauquier	10
Floyd	11
Fluvanna	9
Franklin	10
Frederick	11
Fredericksburg Giles	10
Gloucester	8
Goochland	9
Grayson	11
Greene	10
Greensville	8
Halifax	9
Hampton	8
Hanover	9
Henrico	8
Henry	10
Highland	11
Isle Of Wight	8
James City	8
King And Queen	9
King George	9
King William	9
Lancaster	8
Lee	10
Loudoun	10
Louisa	9
Lunenburg	9
Madison	11
Mathews	8
Mecklenburg	9
Middlesex	8
Montgomery	11
Nansemond	8
Nelson	9
New Kent	8
Newport News	8
Norfolk	8
Northampton	8
Northumberland	8
Nottoway	9
Orange	10
Page	11
Patrick	10
Pittsylvania	9
Powhatan	9
Prince Edward	9
Prince George	8
Prince William	10
Pulaski	11
Rappahannock	11
Richmond	8
Roanoke	9
Rockbridge	9
Rockingham	11
Russell	10
Scott	10
Shenandoah	11
Smyth	11
Southampton	8
Spotsylvania	10
Stafford	10
Surry	8
Sussex	8
Tazewell	11
Virginia Beach	8
Warren	11
Washington	11
Westmoreland	8
Wise	10
Wythe	11
York	8
VIRGINIA INDEPENDENT CITIES	
Alexandria	10
Bedford	9
Bristol	11
Buena Vista	9
Charlottesville	9
Chesapeake	8
Clifton Forge	10
Colonial Hts	9
Covington	10
Danville	9
Emporia	8
Fairfax	10
Falls Church	10
Franklin	8
Fredericksburg	10
Galax	11
Hampton	8
Harrisonburg	11
Hopewell	8
Lexington	9
Lynchburg	9
Manassas	10
Manassas Park	10
Martinsville	10
Newport News	8
Norfolk	8
Norton	10
Petersburg	8
Poquoson	8
Portsmouth	8
Radford	11
Richmond	8
Roanoke	9
Salem	9
South Boston	9
Staunton	11
Suffolk	8
Virginia Beach	8
Waynesboro	11
Williamsburg	8
Winchester	11
WASHINGTON	
Adams	12
Asotin	12
Benton	11
Chelan	12
Clallam	12
Clark	11
Columbia	12
Cowlitz	11
Douglas	14
Ferry	15
Franklin	11
Garfield	12

"Hot and humid" counties exempt from the vapor retarder requirement are marked with an "(H)"

County	Zone
Grant	12
Grays Harbor	11
Island	12
Jefferson	11
King	10
Kitsap	11
Kittitas	14
Klickitat	12
Lewis	11
Lincoln	15
Mason	11
Okanogan	15
Pacific	11
Pend Oreille	15
Pierce	11
San Juan	12
Skagit	11
Skamania	11
Snohomish	11
Spokane	14
Stevens	15
Thurston	11
Wahkiakum	11
Walla Walla	11
Whatcom	12
Whitman	14
Yakima	12
WEST VIRGINIA	
Barbour	13
Berkeley	11
Boone	10
Braxton	11
Brooke	12
Cabell	10
Calhoun	11
Clay	11
Doddridge	12
Fayette	12
Gilmer	11
Grant	13
Greenbrier	12
Hampshire	11
Hancock	12
Hardy	12
Harrison	12
Jackson	11
Jefferson	11
Kanawha	10
Lewis	12
Lincoln	10
Logan	10
Marion	12
Marshall	12
Mason	11
Mcdowell	11
Mercer	11

County	Zone
Mineral	12
Mingo	10
Monongalia	12
Monroe	11
Morgan	11
Nicholas	12
Ohio	12
Pendleton	13
Pleasants	11
Pocahontas	13
Preston	13
Putnam	10
Raleigh	12
Randolph	13
Ritchie	11
Roane	11
Summers	12
Taylor	12
Tucker	13
Tyler	11
Upshur	12
Wayne	10
Webster	12
Wetzel	12
Wirt	11
Wood	11
Wyoming	11
WISCONSIN	
Adams	15
Ashland	17
Barron	16
Bayfield	17
Brown	15
Buffalo	15
Burnett	17
Calumet	15
Chippewa	15
Clark	15
Columbia	15
Crawford	15
Dane	15
Dodge	15
Door	15
Douglas	17
Dunn	15
Eau Claire	15
Florence	17
Fond Du Lac	15
Forest	17
Grant	15
Green	15
Green Lake	15
Iowa	15
Iron	17
Jackson	15
Jefferson	15

County	Zone
Juneau	15
Kenosha	15
Kewaunee	15
La Crosse	15
Lafayette	15
Langlade	17
Lincoln	17
Manitowoc	15
Marathon	15
Marinette	15
Marquette	15
Menominee	15
Milwaukee	15
Monroe	15
Oconto	15
Oneida	17
Outagamie	15
Ozaukee	15
Pepin	15
Pierce	15
Polk	16
Portage	15
Price	17
Racine	15
Richland	15
Rock	15
Rusk	16
Sauk	15
Sawyer	17
Shawano	15
Sheboygan	15
St Croix	15
Taylor	17
Trempealeau	15
Vernon	15
Vilas	17
Walworth	15
Washburn	17
Washington	15
Waukesha	15
Waupaca	15
Waushara	15
Winnebago	15
Wood	15

County	Zone
WYOMING	
Albany	16
Big Horn	15
Campbell	15
Carbon	16
Converse	15
Crook	15
Fremont	15
Goshen	14
Hot Springs	15
Johnson	15
Laramie	15
Lincoln	17
Natrona	15
Niobrara	15
Park	15
Platte	14
Sheridan	15
Sublette	17
Sweetwater	16
Teton	17
Uinta	16
Washakie	15
Weston	15

"Hot and humid" counties exempt from the vapor retarder requirement are marked with an "(H)"

Definitions

MEC*check* Terms

Addition(s)

An extension or increase in the height, conditioned floor area, or conditioned volume of a building. The code applies to additions of existing buildings.

Alteration

Any construction renovation, or change in a mechanical system that involves an extension, addition, or change to the arrangement, type, or purpose of the original installation.

AFUE

Annual fuel utilization efficiency; combustion heating equipment efficiency is expressed in terms of AFUE. New equipment typically ranges from about 78- to 96-percent AFUE. Higher AFUE ratings indicate more efficient equipment.

Basement Wall(s)

Basement walls that enclose conditioned spaces are part of the building envelope. Basement wall refers to the opaque portion of the wall (excluding windows and doors). To be considered a basement wall, at least 50% of the wall's total wall area (including openings) must be below grade. Treat walls on each side of the basement individually when determining if they are above grade or basement walls. For any individual wall less than 50% below grade, indicate the entire opaque wall area of that individual wall as part of the above-grade walls.

BOCA

Building Officials and Code Administrators International, Inc.

Building Envelope

All components of a building that enclose conditioned space. Building envelope components separate conditioned spaces from unconditioned spaces or from outside air (see conditioned space). For example, walls and doors between an unheated garage and a living area are part of the building envelope; walls separating an unheated garage from the outside are not. Although floors of conditioned basements and conditioned crawl spaces are technically part of the building envelope, the code does not specify insulation requirements for these components and they can be ignored.

Ceiling(s)

The ceiling requirements apply to portions of the roof and/or ceiling through which heat flows. Ceiling components include the interior surface of flat ceilings below attics, the interior surface of cathedral or vaulted ceilings, skylights, or vaulted ceilings, skylights and sloped building assemblies less than 60° from horizontal, but excluding skylight shafts. Refer to Building Envelope Components in Appendix C for a comprehensive list of ceiling components.

Conditioned

See Conditioned Space

Conditioned Space

A space is conditioned if heating and/or cooling is deliberately supplied to it or is indirectly supplied through uninsulated surfaces of water or heating equipment or through uninsulated ducts. For example, a basement with registers or heating devices designed to supply heat is conditioned. An indirectly heated basement is also conditioned if the basement ceiling is not insulated and heat is indirectly supplied to the space, such as through uninsulated ducts or through uninsulated surfaces of water heaters or space heating equipment.

Cooled

A space within a building which is provided with a positive cooling supply.

Crawl Space

The MECcheck crawl space wall insulation requirements are for the exterior walls of unventilated crawl spaces (i.e. not directly vented to the outside) below uninsulated floors. A crawl space wall component includes the opaque portion of a wall that encloses a crawl space and is partially or totally below grade, as measured from the sill to the top of the footing.

Crawl Space Wall(s)

The opaque portion of a wall which encloses a crawl space and is partially or totally below grade.

Door

Doors include all openable opaque assemblies located in exterior walls of the building envelope. Doors with glass can be treated as a single door assembly, in which case an aggregate U-factor (a U-factor that includes both the glass and the opaque area) must be used; OR the glass area of the door can be included with the other glazing and an opaque door U-factor can be used to determine compliance of the door.

Dwelling Unit

A single housekeeping unit of one or more rooms providing complete, independent living facilities, including permanent provisions for living, sleeping, eating, cooking, and sanitation.

Equipment Efficiency(ies)

The measure of equipment efficiency varies with equipment type. Combustion heating equipment efficiency is expressed in terms of AFUE. New equipment typically ranges from about 78- to 96-percent AFUE. Cooling efficiency for electric air conditioners and heat pumps is expressed in terms of SEER. New equipment ranges from 10 to about 16 SEER. Heat pump heating is expressed in terms of HSPF. New equipment ranges from about 6.8 to 10.0 HSPF. Higher AFUE, SEER, and HSPF ratings indicate more efficient equipment.

Glazing

Any translucent or transparent material in exterior openings of buildings, including windows, skylights, sliding doors, the glass area of opaque doors, and glass block.

Glazing Area

The area of a glazing assembly is the interior surface area of the entire assembly, including glazing, sash, curbing, and other framing elements. The nominal area or rough opening is also acceptable for flat windows and doors.

Gross Wall Area

The gross wall area includes the opaque area of above-grade walls, the opaque area of any individual wall of a conditioned basement less than 50% below grade (including the below-grade portions), all windows and doors (including windows and doors of conditioned basements), and the peripheral edges of floors.

Heated

A space within a building which is provided with a positive heat supply.

Heating Degree Days

A unit, based upon temperature difference and time, used in estimating fuel consumption and specifying nominal heating load of a building in winter. For any one day, when the mean temperature is less than 65°F (18°C), there exists as many degree days as there are Fahrenheit degrees difference in temperature between the mean temperature for the day and 65°F (18°C).

HSPF

Heating seasonal performance factor; heat pump heating is expressed in terms of HSPF. New equipment ranges from about 6.8 to 10.0 HSPF. Higher HSPF ratings indicate more efficient equipment.

HUD

The U.S. Department of Housing and Urban Development

ICBO

The International Conference of Building Officials

ICC

The International Code Council

IECC

The International Energy Conservation Code; formerly known as the MEC

MEC

The Model Energy Code

Multifamily

A multifamily building is a residential building three stories or less in height that contains three or more attached dwelling units. Multifamily buildings include apartments, condominiums, townhouses, and rowhouses. Hotels and motels are considered commercial rather than residential buildings.

NAECA

The National Appliance Energy Conservation Act of 1987, 42 USC 6291 et seq., as amended, Public Law 100-12.

Net Wall Area

The net wall area includes the opaque wall area of all above-grade walls enclosing conditioned spaces, the opaque area of conditioned basement walls less than 50% below grade (including the below-grade portions), and peripheral edges of floors. The net wall area does not include windows, doors, or other such openings, as they are treated separately.

NFRC

National Fenestration Rating Council

Opaque Areas

Opaque areas referenced in this guide include all areas of the building envelope except openings for windows, skylights, doors, and building service systems. For example, although solid wood and metal doors are opaque, they should not be included as part of the opaque wall area (also referred to as the net wall area).

Repair

A repair includes the reconstruction or renewal of any part of an existing building for maintenance purposes.

Raised Truss

Raised truss refers to any roof/ceiling construction that allows the insulation to achieve its full thickness over the plate line of exterior walls. Several constructions allow for this, including elevating the heel (sometimes referred to as an energy truss, raised-heel truss, or Arkansas truss), use of cantilevered or oversized trusses, lowering the ceiling joists, or framing with a raised rafter plate.

RECD

The Rural Economic and Community Development, formerly the Farmer's Home Administration.

Residences

See Residential Buildings

Residential Buildings

For the purposes of the code, Group R residential buildings include:

- Type A-1 – Detached one- and two-family dwellings; and
- Type A-2 – All other residential buildings, three stories or less in height

R-Value

A measure (h ft^2 °F/Btu) of thermal resistance, or how well a material or series of materials resists the flow of heat. R-value is the reciprocal of U-factor.

$$\text{R-Value} = \frac{1}{\text{U-Factor}}$$

SBCCI

The Southern Building Code Congress International, Inc.

SEER

Seasonal energy efficiency ratio; cooling efficiency for electric air conditioners and heat pumps is expressed in terms of SEER. New equipment ranges from about 10 to 16 SEER. Higher SEER ratings indicate more efficient equipment.

Single Family

A detached one- and two-family residential building, irrespective of height.

Skylight

Glazing that is horizontal or sloped at an angle less than 60° (1.1 rad) from horizontal.

Slab Edge

Slab edge refers to the perimeter of a slab-on-grade floor, where the top edge of the slab floor is above the finished grade or 12 in. or less below the finished grade. The slab perimeter should include the length of all edges of a slab foundation that are part of the building envelope and are less than 12 in. below grade (i.e. all edges separating conditioned space from unconditioned space).

The insulation can be installed using any of the following configurations, but in all cases it must start at the top of the slab:

- The slab insulation extends from the top of the slab downward to the required depth.
- The slab insulation extends fromthe top of the slab downward to the bottom of the slab and then horizontally underneath the slab for a minimum total linear distance equal to or greater than the required length.
- The slab insulation extends from the top of the slab downward to the bottom of the slab and then horizontally away from the slab for a minimum total linear distance equal to or greater than the required depth. The horizontal insulation must be covered by pavement or at least 10 in. of soil.

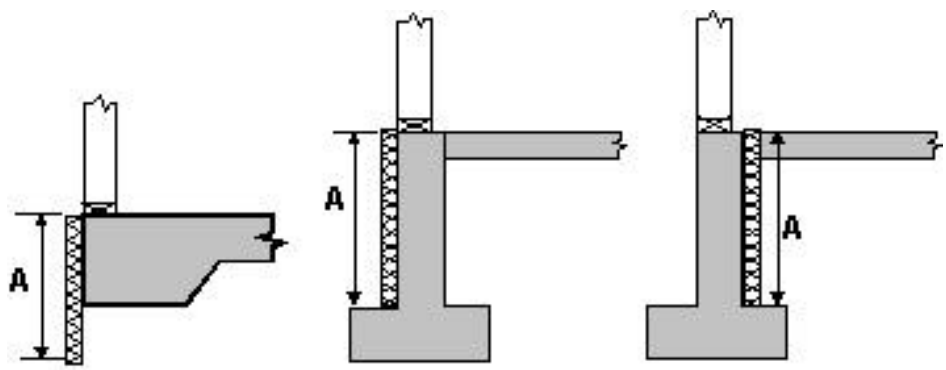

A = insulation depth

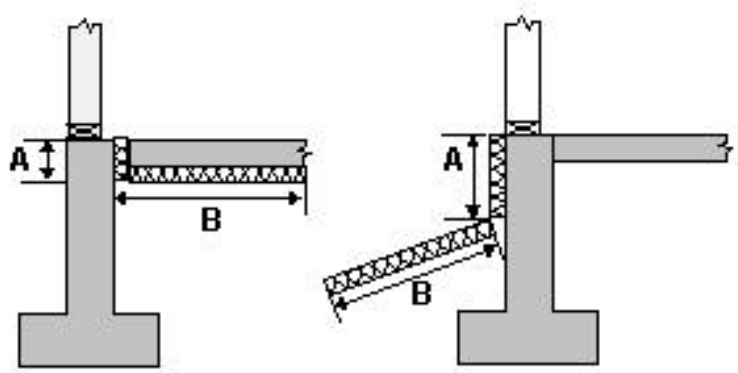

A + B = insulation depth

The top edge of insulation installed between the exterior wall and the interior slab can be cut at a 45° angle away from the exterior wall.

Slab-On-Grade Floor

A floor that is poured in direct contact with the earth.

Unconditioned

An enclosed space within a building that is not a conditioned space.

U-Factor

A measure (Btu/h ft^2 °F) of how well a material or series of materials conducts heat. U-factors for window and door assemblies are the reciprocal of the assembly R-value.

$$\text{U-Factor} = \frac{1}{\text{R-Value}}$$