AEDG Implementation Recommendations: Interior Lighting Sample Layouts for Office Buildings

The Advanced Energy Design Guide (AEDG) seeks to achieve 30 percent savings over Standard 90.1-1999. This guide focuses on improvements to small office buildings, less than 20,000 square feet. The recommendations below are adapted from the implementation section of the guide, and should be used in cooperation with the whole document.* The full design guide is available from the ASHRAE website, Advanced Energy Design Guide for Small Office Buildings .

The 0.9 W/ft2 foot goal for lighting power represents an average lighting power density for the entire building. Individual spaces may have higher power densities if they are offset by lower power densities in other areas. The example design described below is one way (but not the only way) that this watts-per-square-foot limit can be met. Daylight controls are assumed in all open office plans and under all skylights.

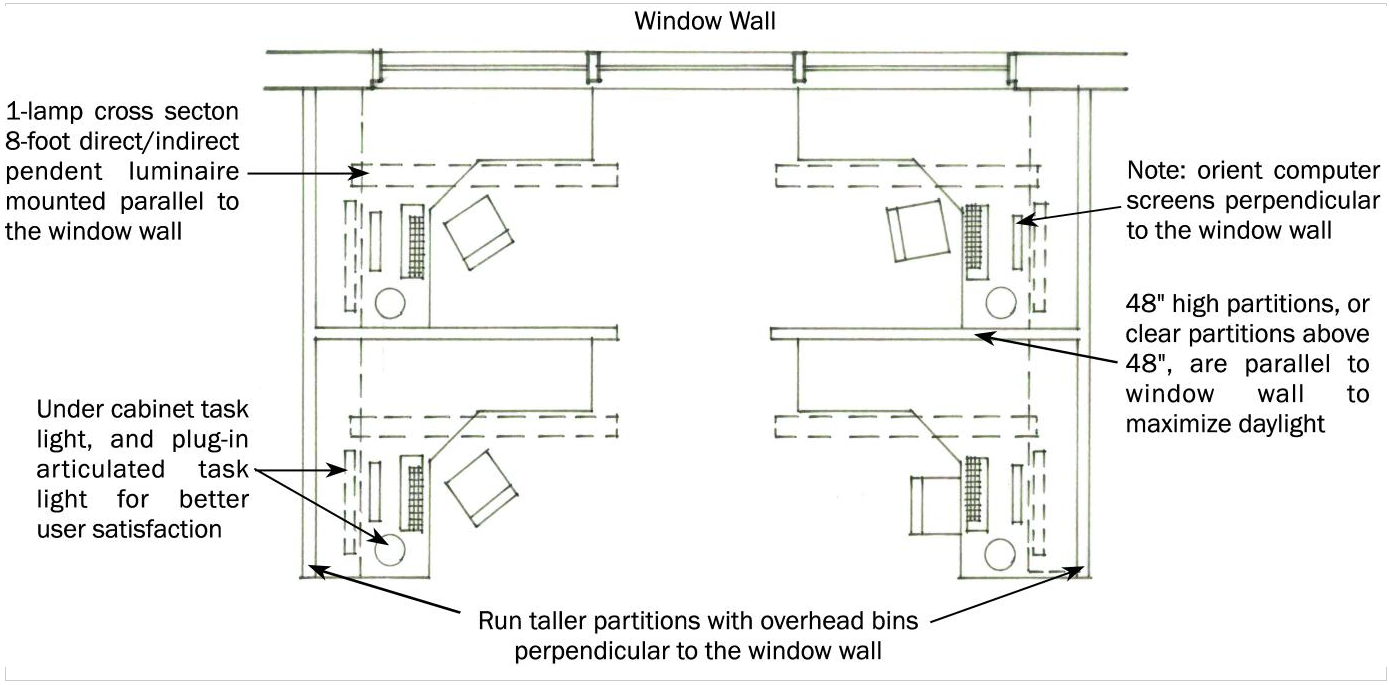

Open Plan Office

The target lighting in open offices is 30 average maintained footcandles for ambient lighting with a total of at least 50 footcandles provided on the desktop by a combination of the ambient and supplemental task lighting. Open plan offices account for approximately 20% of the floor area. Assuming an 8 foot by 8 foot work station and a 4 foot center aisle, this layout is about 1.03 W/ft2 including task lighting wattage. Use daylight dimming ballasts and photocell control in daylight zone (within 12 feet of window wall) if WWR is greater than 25% in this area. Use occupancy sensor local control or scheduling on all luminaires.

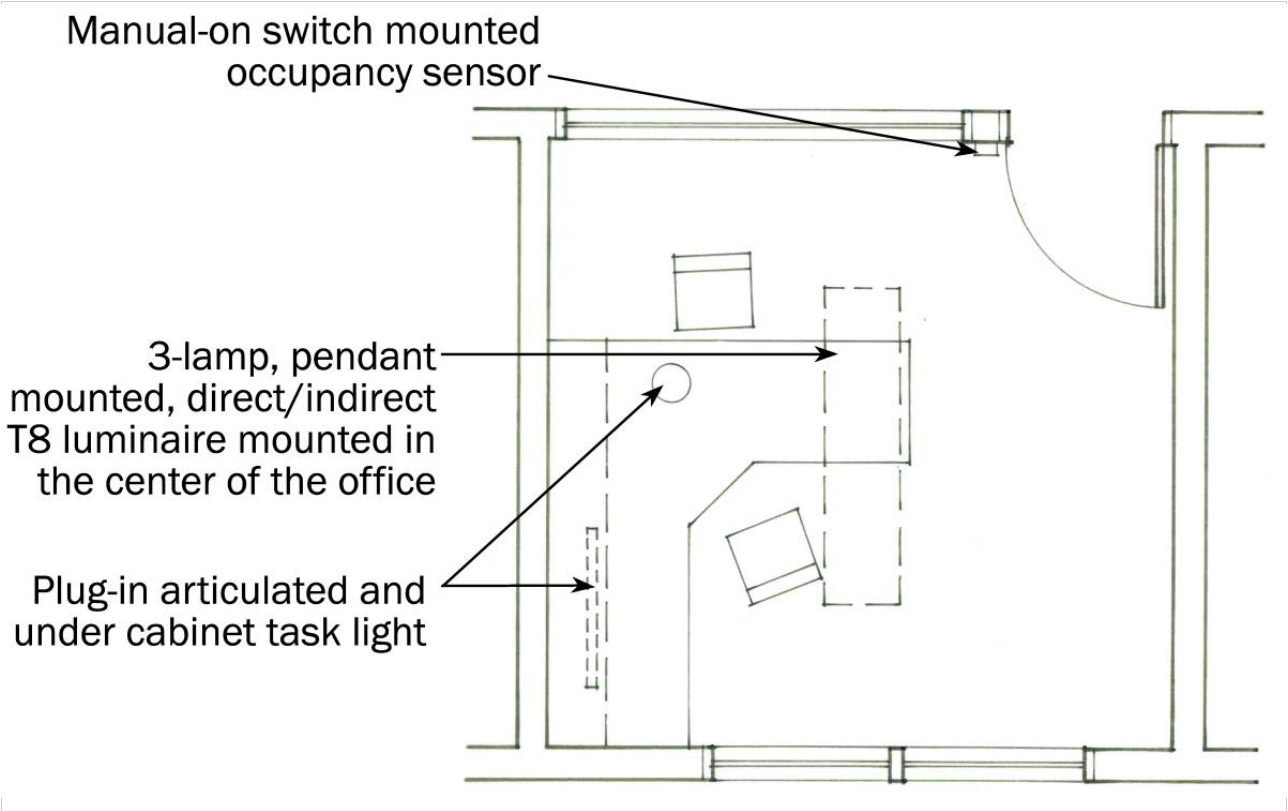

Private Office

The target lighting in private offices is 30 average maintained footcandles for ambient lighting with a total of at least 50 footcandles provided on the desktop by a combination of the ambient and supplemental task lighting. Private office plans account for approximately 25% of the floor area.

Assuming a 10 foot by 12 foot office, this layout is about 0.94 W/ft2 including task lighting wattage. Use occupancy sensor local control.

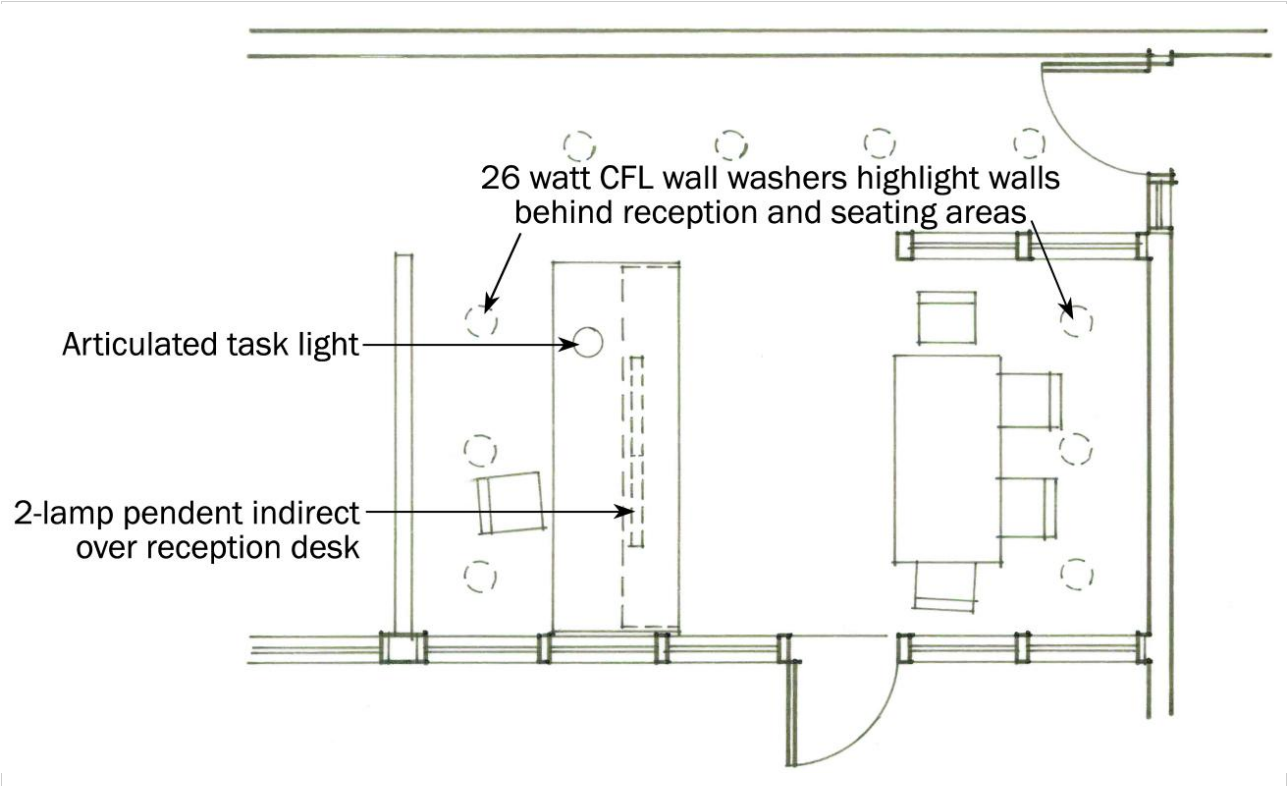

Lobbies

The target lighting in the lobby is 10-15 average maintained footcandles. Highlight wall surfaces and building directory. Lobbies account for approximately 10% of the floor area. The layout in the Figure is about 1.09 W/ft2.

Corridors

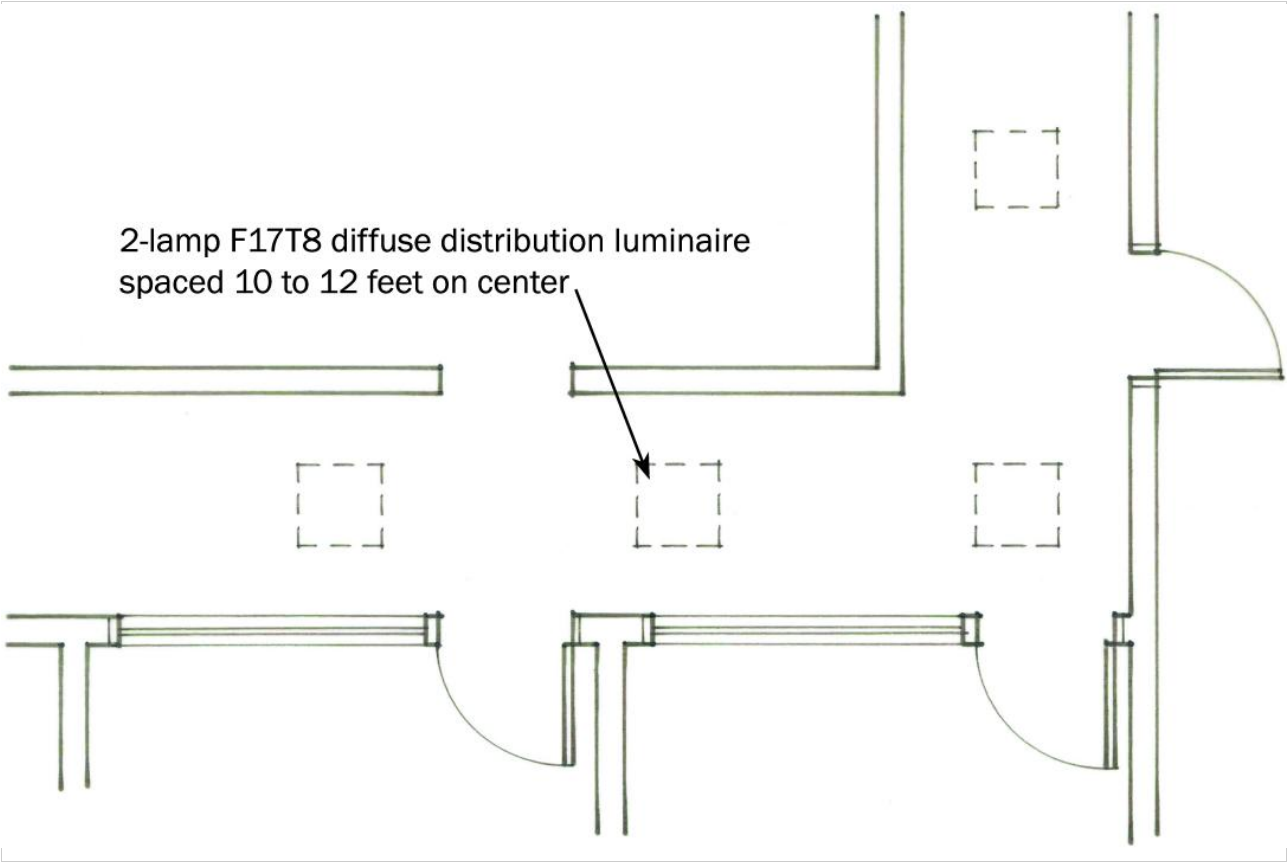

The target lighting in the corridors is 5-10 average maintained footcandles. Choose luminaires that light the walls and provide relatively uniform illumination. Corridors account for approximately 10% of the floor area. Optional layouts using one-lamp 1 x 4 or 26-watt CFL sconce or ceiling luminaires may be used to minimize the number of lamp types on the project. This layout yields 0.55 W/ft2 when spaced 12 feet on center in a 5-foot-wide corridor.

Conference/Meeting Rooms

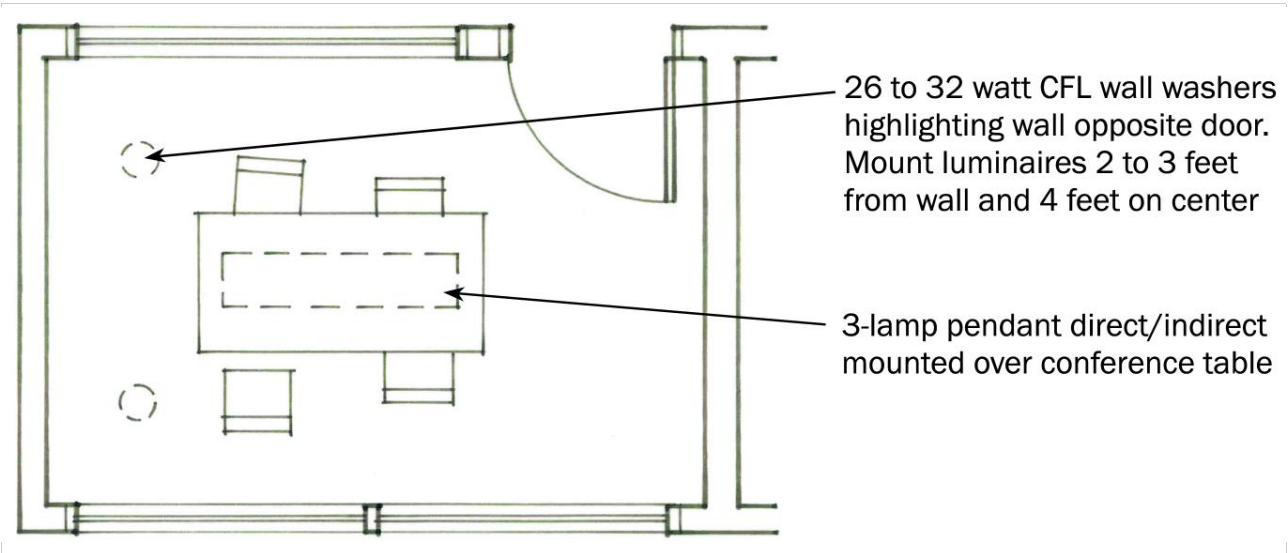

The target lighting in the conference room is 30-40 average maintained footcandles. Use occupancy sensor local control. Conference rooms account for approximately 10% of the floor area. The layout in Figure 4-28 is

about 1.02 W/ft2.

Storage

The target lighting in the storage is 5-15 average maintained footcandles. Storage areas account for approximately 15% of the floor area. The layout in the Figure is about 0.78 W/ft2.

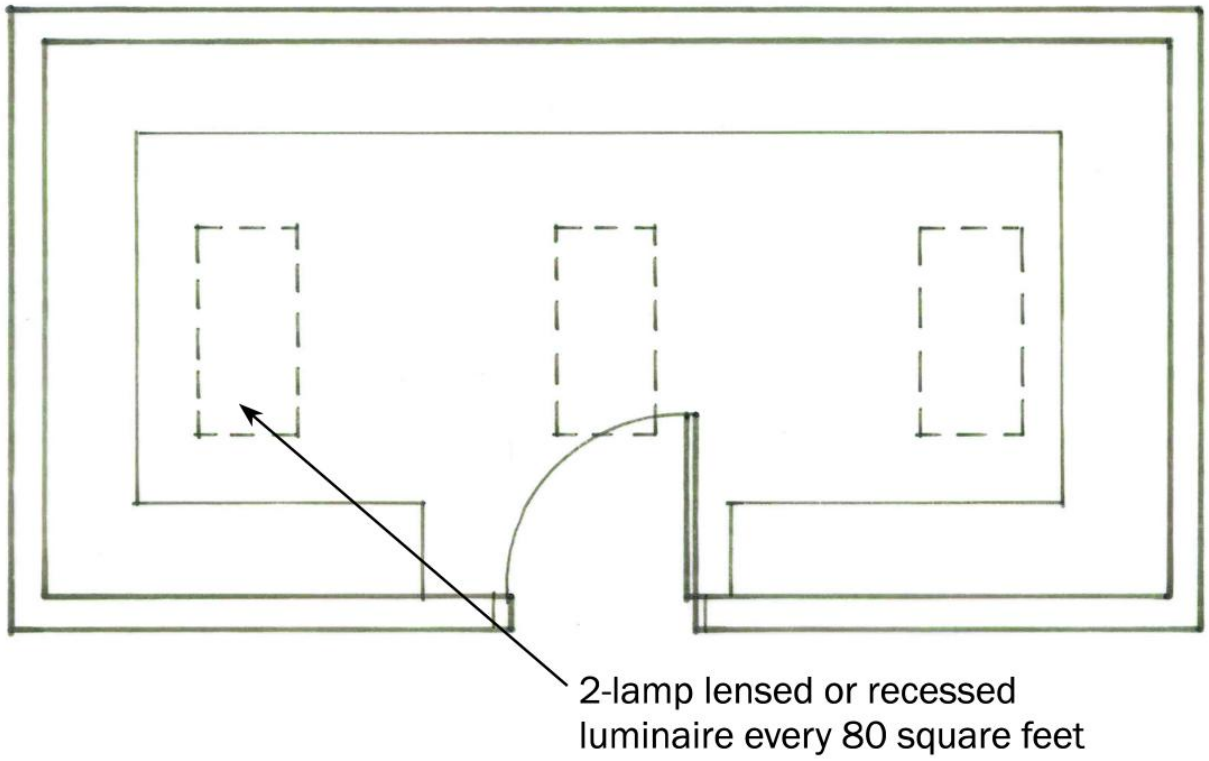

Note: Lighting in remaining 10% of the office space is composed of various functions including restrooms, electrical/mechanical rooms, stairways, workshops, and others. Average the connected load in these spaces to 0.75 W/ft2, which is equivalent to about one twolamp high-performance T8 luminaire every 80 ft2. Use occupancy sensors or timers where appropriate.

The designed lighting power density does not exceed the recommended 0.90 W/ft2 for the total building interior.

Overhead Glare Control

Specify luminaires properly shielded for worker comfort. Avoid T5 lamps in open-bottomed fixtures. Avoid specular (shiny) louvers, cones, or reflectors visible to occupants from any angle. Use efficient fixtures and proper distribution. Include the partial height partitions in lighting calculations and for spacing. Use more fixtures of lower wattage rather than the reverse.

* ASHRAE AEDG Reference and link Copyright, 2004, American Society of Heating, Refrigerating and Air-Conditioning Engineers , Atlanta, GA. *Advanced Energy Design Guide for Small Office Buildings* . Reproduced with permission. All rights reserved.